THIS DRAWING IS UNPUBLISHED. RELEASED FOR PUBLICATION 20
© COPYRIGHT 20 BY - ALL RIGHTS RESERVED.

REVISIONS

P	LTR	DESCRIPTION	DATE	DWN	APVD
	A	INITIAL RELEASE	22JUN2016	N.P	X.X
	A1	ECR-19-006232	18APR2019	B.P	C.W

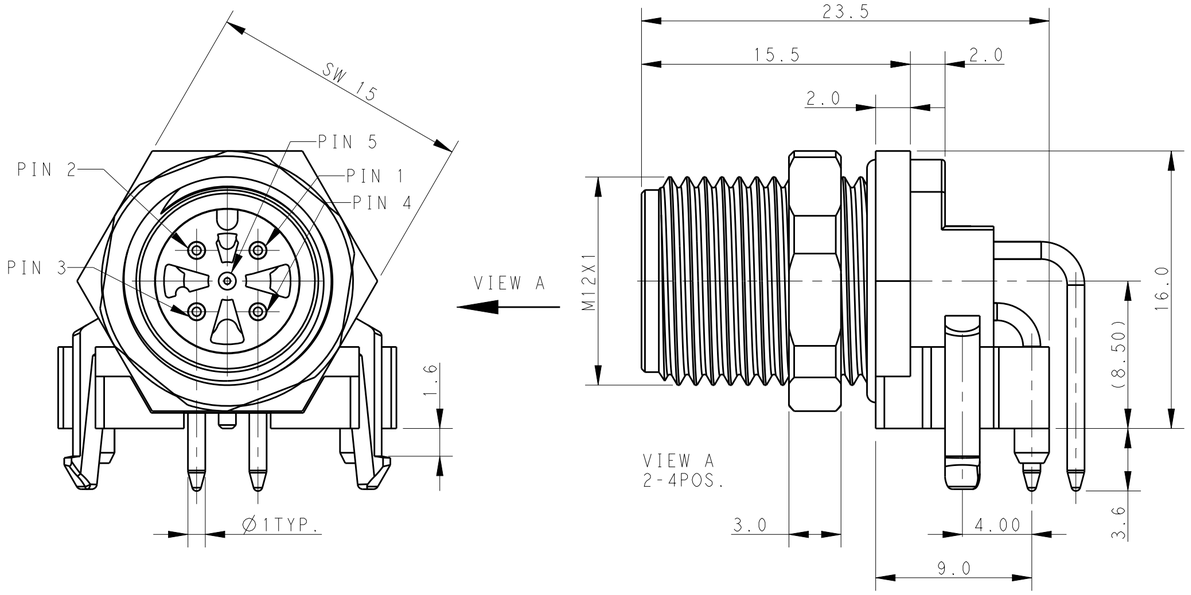

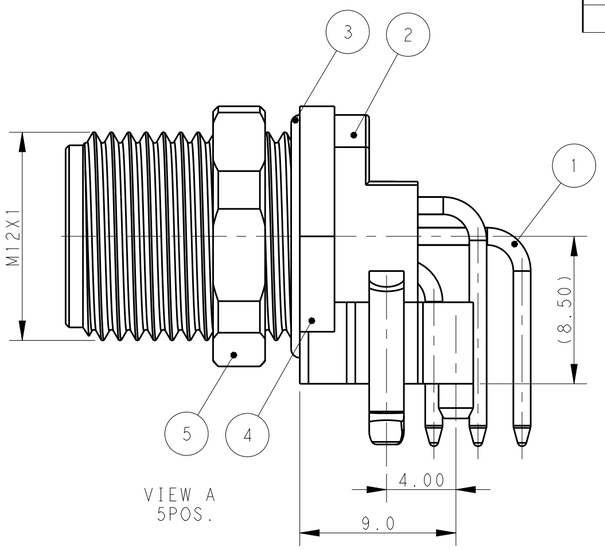

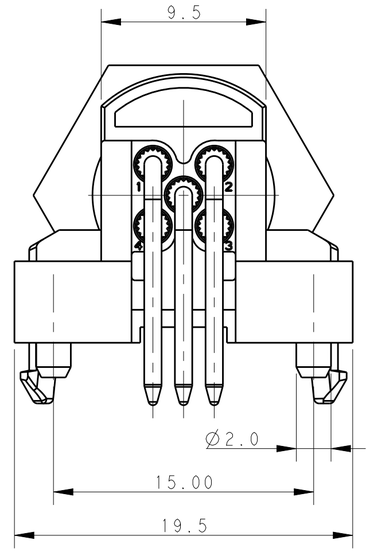

TABLE 1

TECHNICAL DATA	T4144015021-000	T4144015031-000	T4144015041-000	T4144015051-000
RATED VOLTAGE	250V	250V	250V	60V
RATED CURRENT	4A	4A	4A	4A
POLLUTION DEGREE	3	3	3	3
OVERVOLTAGE CATEGORY	II	II	II	II
MATERIAL GROUP	II	II	II	II
DEGREE OF PROTECTION	IP67	IP67	IP67	IP67
OPERATION TEMPERATURE	-40~85°C	-40~85°C	-40~85°C	-40~85°C

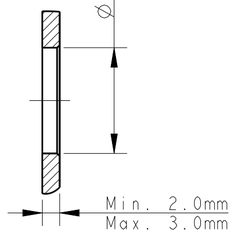

RECOMMENDED
PANEL SIZE

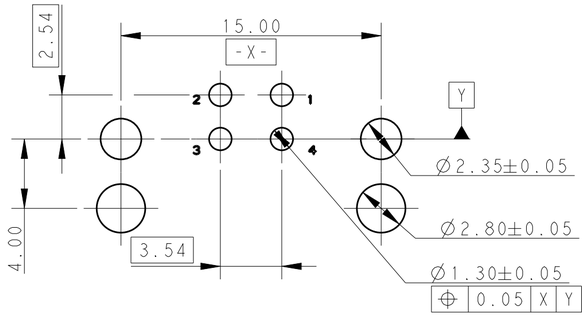

RECOMMEND PCB LAYOUT FOR 2-4POS.

PCB THICKNESS:1.6mm

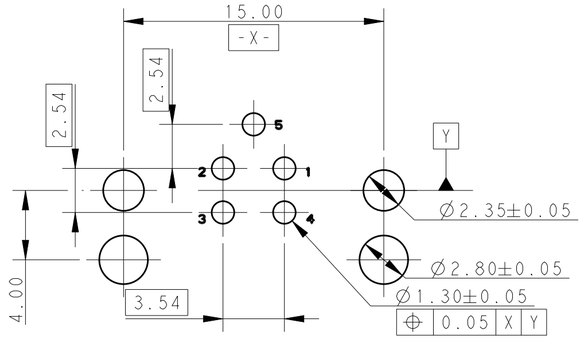

RECOMMEND PCB LAYOUT FOR 5POS.

PCB THICKNESS:1.6mm

NOTES:

1. TECHNICAL DATA: SEE TABLE 1
2. PIN ARRANGEMENT: SEE TABLE 2
3. RECOMMENDED PANEL CUTOUT AND PCB LAYOUT SEE DETAIL .
4. ALL DIMENSIONS ARE FOR NOMINAL REFERENCE ONLY UNLESS OTHERWISE STATED

注意事项

1. 技术参数：见表 1
2. PIN 针排布见表2；
3. 推荐面板及PCB开孔尺寸如图所示；
4. 所有尺寸仅供参考，除另外说明。

-	COPPER ALLOY	NUT	5
-	COPPER ALLOY	COUPLING NUT	4
	RUBBER	O-RING	3
BALCK COLOR	PA66	HOUSING	2
GOLD FLASH	COPPER ALLOY	CONTACT	1
COMMENTS	MATERIAL	DESCRIPITON	ITEM

TABLE 2

PIN ARRANGEMENT
A-CODE

T4144015021-000	T4144015031-000	T4144015041-000	T4144015051-000
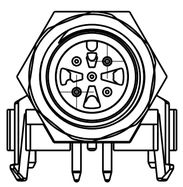	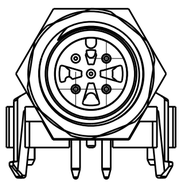	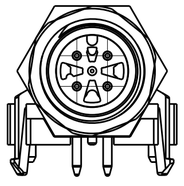	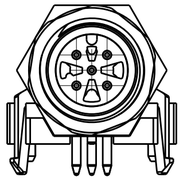

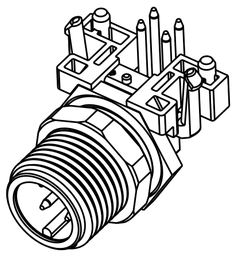

TYPE	POS.	PART NUMBER
RPC-M12-MR-5CON-M12-LPU	5	T4144015051-000
RPC-M12-MR-4CON-M12-LPU	4	T4144015041-000
RPC-M12-MR-3CON-M12-LPU	3	T4144015031-000
RPC-M12-MR-2CON-M12-LPU	2	T4144015021-000

THIS DRAWING IS A CONTROLLED DOCUMENT.

DIMENSIONS: mm

TOLERANCES UNLESS OTHERWISE SPECIFIED:
0 PLC ±
1 PLC ±0.25
2 PLC ±0.15
3 PLC ±
4 PLC ±
ANGLES ±

MATERIAL: TBD material_2

FINISH: - finish_spec_2

DWN	11MAY2016 Nick Pan
CHK	11MAY2016 Kobby Zhao
APVD	11MAY2016 Xiang Xu
PRODUCT SPEC	108-106140
APPLICATION SPEC	114-137144-1
WEIGHT	-
CUSTOMER DRAWING	

TE Connectivity

NAME: M12 RIGHT ANGLE PCB CONNECTOR ASSEMBLY, MALE, UNSHIELDED, A-CODE

SIZE	CAGE CODE	DRAWING NO	RESTRICTED TO
A2	-	C-T4144015OX1000	-

SCALE 2:1 SHEET 1 OF 1 REV A1

1471-9 (3/13)

Downloaded from Arrow.com.