Tube Output (25 - 75 Watts) Single Ended - HI-FI *1627-1642 Series*







Classic

RoHS

Features

- "Over designed" for high fidelity, single ended, Class-A, tube output circuits (triode, tetrode or pentode tubes).
- Enclosed (shielded), four slot, chassis Type "X" mounting.
- Frequency response at least 20 Hz. to 20 Khz. at full rated power (+/- 1 db max., ref. 1 Khz.)
- Insulated flexible leads 8" min.
- For maximum versatility, all units (except the 1642SE & 1638SEA) include a 40% screen tap for Ultra-Linear, tetrode/pentode operation (if desired). The 1642SE & 1638SEA do NOT include this screen tap as they were designed principally for high impedance triode tubes.
- High quality laminations, (M6) grain oriented silicon steel.
- Core is gapped to reduce core saturation in Class-A tube amplifier circuits.
- For general purpose or replacement use in single ended tube output circuits see our **125SE Series**.

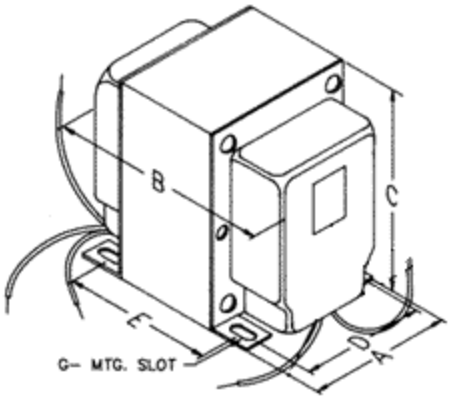

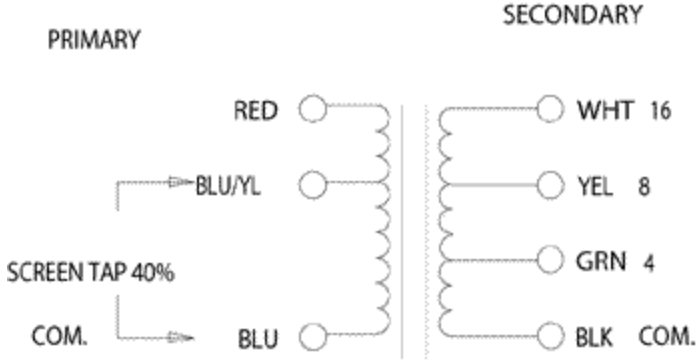

Part No.	Audio Watts	Primary Impedance (Ohms)	Max. DC Bias	Ultra-Linear 40% Primary Tap	Secondary Impedance (Ohms)	Hipot Test (VRMS)	Weight (lbs.)	Overall Dimensions A	B	C	D	E	Mounting Slot G		
1626SEA	25	600	250 ma.	Yes	4-8-16	2000	11	3.75	4.44	4.56	3.00	3.31	0.20	x	0.38
1640SEA	30	1250	200 ma.	Yes	4-8-16	2000	11	3.75	4.94	4.56	3.00	3.81	0.20	x	0.38

Downloaded from Arrow.com.

Part No.	Audio Watts	Primary Impedance (Ohms)	Max. DC Bias	Ultra-Linear 40% Primary Tap	Secondary Impedance (Ohms)	Hipot Test (VRMS)	Weight (lbs.)	Overall Dimensions A	B	C	D	E		Mounting Slot G	
1627SEA	30	2500	160 ma.	Yes	4-8-16	2000	11	3.75	4.94	4.56	3.00	3.81	0.20	x	0.38
1630SEA	30	3500	135 ma.	Yes	4-8-16	2000	11	3.75	4.94	4.56	3.00	3.81	0.20	x	0.38
1628SEA	30	5000	120 ma.	Yes	4-8-16	2000	11	3.75	4.94	4.56	3.00	3.81	0.20	x	0.38
1642SE	75	5000	300 ma.	No	4-8-16	3500	28	4.38	7.50	5.25	3.50	5.88	0.20	x	0.38
1629SEA	30	6500	100 ma.	Yes	4-8-16	2000	11	3.75	4.94	4.56	3.00	3.81	0.20	x	0.38
1638SEA	30	10000	90 ma.	No	4-8-16	2000	11	3.75	4.94	4.56	3.00	3.81	0.20	x	0.38

- RED wire connects to B+
- BLUE/YELLOW wire connects to screen (optional use)
- BLUE wire connects to the tube plate
- The 1642SE & 1638SEA do not include a primary screen tap (as they are designed for triode applications).

Suggested Tube Types:

Part No.	Triodes	Pentodes
1626SEA	6C33	-
1640SEA	Parallel - 2A3, 6A3, 6B4G, 300B, 572B, 811A	Parallel - 6550, 6CA7
1627SEA	2A3, 6A3, 6B4G, 300B	6CA7, 6L6, 807, 5881, 6550, Parallel - 6AQ5, 6V6, EL84
1630SEA	2A3, 6A3, 6B4G, 300B	6CA7, 6L6, 807, 5881, 6550, Parallel - 6AQ5, 6V6, EL84
1628SEA	211, 300B, 572B, 811A	6AQ5, 6V6, 6L6, 807, 5881, 6550, EL84
1642SE	Parallel - 211, 572, 811A, 845	-
1629SEA	211, 811A, 572B, 845	6AQ5, 6V6, 6L6, 807, 5881, 6550, EL84
1638SEA	211, 845	-

Notes: The above examples of possible combinations are to help you narrow down the choices of transformers for your favorite tube types. How you operate the tubes (ultra-linear, bias, plate voltage, operating points, etc.) will change optimum plate load impedance. Only a few of the most popular tubes are shown. A tube manual or tube manufacturer's technical data sheets should be consulted first, before making a decision on a proper output transformer.

Tags: **audio transformer**, **tube output**, **single ended**, **hi-fi**, **shielded**, **triode**, **tetrode**, **pentode**

Data subject to change without notice.

© 2026. Hammond Manufacturing Ltd. All rights reserved.

Downloaded from Arrow.com.