ON Semiconductor

Is Now

To learn more about onsemi™, please visit our website at
www.onsemi.com

onsemi and onsemi and other names, marks, and brands are registered and/or common law trademarks of Semiconductor Components Industries, LLC dba "**onsemi**" or its affiliates and/or subsidiaries in the United States and/or other countries. **onsemi** owns the rights to a number of patents, trademarks, copyrights, trade secrets, and other intellectual property. A listing of **onsemi** product/patent coverage may be accessed at www.onsemi.com/site/pdf/Patent-Marking.pdf. **onsemi** reserves the right to make changes at any time to any products or information herein, without notice. The information herein is provided "as-is" and **onsemi** makes no warranty, representation or guarantee regarding the accuracy of the information, product features, availability, functionality, or suitability of its products for any particular purpose, nor does **onsemi** assume any liability arising out of the application or use of any product or circuit, and specifically disclaims any and all liability, including without limitation special, consequential or incidental damages. Buyer is responsible for its products and applications using **onsemi** products, including compliance with all laws, regulations and safety requirements or standards, regardless of any support or applications information provided by **onsemi**. "Typical" parameters which may be provided in **onsemi** data sheets and/or specifications can and do vary in different applications and actual performance may vary over time. All operating parameters, including "Typicals" must be validated for each customer application by customer's technical experts. **onsemi** does not convey any license under any of its intellectual property rights nor the rights of others. **onsemi** products are not designed, intended, or authorized for use as a critical component in life support systems or any FDA Class 3 medical devices or medical devices with a same or similar classification in a foreign jurisdiction or any devices intended for implantation in the human body. Should Buyer purchase or use **onsemi** products for any such unintended or unauthorized application, Buyer shall indemnify and hold **onsemi** and its officers, employees, subsidiaries, affiliates, and distributors harmless against all claims, costs, damages, and expenses, and reasonable attorney fees arising out of, directly or indirectly, any claim of personal injury or death associated with such unintended or unauthorized use, even if such claim alleges that **onsemi** was negligent regarding the design or manufacture of the part. **onsemi** is an Equal Opportunity/Affirmative Action Employer. This literature is subject to all applicable copyright laws and is not for resale in any manner. Other names and brands may be claimed as the property of others.

Downloaded from Arrow.com.

MOSFET – Single N-Channel, SUPERFET® III, FRFET®
650 V, 65 A, 40 mΩ

NVH4L040N65S3F

Features

- Ultra Low Gate Charge & Low Effective Output Capacitance
- Lower FOM ($R_{DS(on)\ max.}$ x $Q_{g\ typ.}$ & $R_{DS(on)\ max.}$ x E_{OSS})
- AEC−Q101 Qualified and PPAP Capable
- These Devices are Pb−Free and are RoHS Compliant

ON Semiconductor®

www.onsemi.com

V_{DSS}	$R_{DS(ON)}$ MAX	I_D MAX
650 V	40 mΩ @ 10 V	65 A

MAXIMUM RATINGS (T_C = 25°C unless otherwise noted)

Parameter	Symbol	Value	Unit
Drain−to−Source Voltage	V_{DSS}	650	V
Gate−to−Source Voltage − DC	V_{GSS}	±30	V
Gate−to−Source Voltage − AC (f > 1 Hz)	V_{GSS}	±30	V
Drain Current − Continuous (T_C = 25°C)	I_D	65	A
Drain Current − Continuous (T_C = 100°C)	I_D	45	A
Drain Current − Pulsed (Note 3)	I_{DM}	162.5	A
Power Dissipation (T_C = 25°C)	P_D	446	W
Power Dissipation − Derate Above 25°C	P_D	3.57	W/°C
Operating Junction and Storage Temperature Range	T_J, T_{STG}	−55 to +150	°C
Single Pulsed Avalanche Energy (Note 4)	E_{AS}	1009	mJ
Repetitive Avalanche Energy (Note 3)	E_{AR}	4.46	mJ
MOSFET dv/dt	dv/dt	100	V/ns
Peak Diode Recovery dv/dt (Note 5)	dv/dt	50	V/ns
Max. Lead Temperature for Soldering Purposes (1/8″ from case for 5 s)	T_L	300	°C

THERMAL CHARACTERISTICS

Parameter	Symbol	Value	Unit
Thermal Resistance, Junction−to−Case, Max. (Notes 1, 2)	$R_{\theta JC}$	0.28	°C/W
Thermal Resistance, Junction−to−Ambient, Max. (Notes 1, 2)	$R_{\theta JA}$	40	

Stresses exceeding those listed in the Maximum Ratings table may damage the device. If any of these limits are exceeded, device functionality should not be assumed, damage may occur and reliability may be affected.

1. The entire application environment impacts the thermal resistance values shown. They are not constants and are only valid for the particular conditions noted.
2. Assembled to an infinite heatsink with perfect heat transfer from the case (assumes 0 K/W thermal interface).
3. Repetitive rating: pulse−width limited by maximum junction temperature.
4. I_{AS} = 9 A, R_G = 25 Ω, starting T_J = 25°C.
5. I_{SD} ≤ 32.5 A, di/dt ≤ 200 A/μs, V_{DD} ≤ 400 V, starting T_J = 25°C.

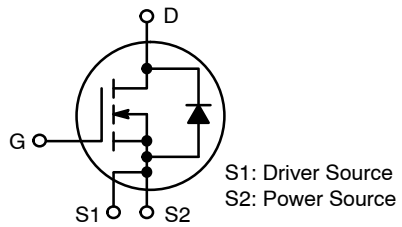

POWER MOSFET

MARKING DIAGRAM

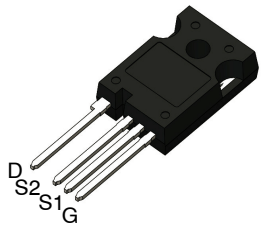

TO−247−4LD
CASE 340CJ

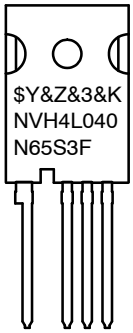

$Y	= ON Semiconductor Logo
&Z	= Assembly Plant Code
&3	= Data Code (Year & Week)
&K	= Lot
NVH4L040N65S3F	= Specific Device Code

ORDERING INFORMATION

Device	Package	Shipping
NVH4L040N65S3F	TO−247−4LD (Pb−Free)	30 Units / Tube

© Semiconductor Components Industries, LLC, 2020

Downloaded from Arrow.com.

ELECTRICAL CHARACTERISTICS (T_C = 25°C unless otherwise noted)

Parameter	Symbol	Test Conditions	Min	Typ	Max	Unit
OFF CHARACTERISTICS						
Drain−to−Source Breakdown Voltage	BV_{DSS}	V_{GS} = 0 V, I_D = 1 mA, T_J = 25°C	650			V
Drain−to−Source Breakdown Voltage	BV_{DSS}	V_{GS} = 0 V, I_D = 10 mA, T_J = 150°C	700			V
Breakdown Voltage Temperature Coefficient	$\Delta BV_{DSS}/\Delta T_J$	I_D = 10 mA, Referenced to 25°C		640		mV/°C
Zero Gate Voltage Drain Current	I_{DSS}	V_{GS} = 0 V, V_{DS} = 650 V			10	μA
		V_{DS} = 520 V, T_C = 125°C		103		
Gate−to−Body Leakage Current	I_{GSS}	V_{GS} = ±30 V, V_{DS} = 0 V			±100	nA
ON CHARACTERISTICS						
Gate Threshold Voltage	$V_{GS(th)}$	V_{GS} = V_{DS}, I_D = 2.1 mA	3.0		5.0	V
Threshold Temperature Coefficient	$\Delta V_{GS(th)}/\Delta T_J$	V_{GS} = V_{DS}, I_D = 2.1 mA		−9		mV/°C
Static Drain−to−Source On Resistance	$R_{DS(on)}$	V_{GS} = 10 V, I_D = 32.5 A		33.8	40	mΩ
Forward Transconductance	g_{FS}	V_{DS} = 20 V, I_D = 32.5 A		40		S
DYNAMIC CHARACTERISTICS						
Input Capacitance	C_{iss}	V_{GS} = 0 V, V_{DS} = 400 V, f = 1 MHz		5665		pF
Output Capacitance	C_{oss}			148		
Reverse Transfer Capacitance	C_{rss}			15.8		
Effective Output Capacitance	$C_{oss(eff.)}$	V_{DS} = 0 V to 400 V, V_{GS} = 0 V		1347		pF
Energy Related Output Capacitance	$C_{oss(er.)}$	V_{DS} = 0 V to 400 V, V_{GS} = 0 V		240		pF
Total Gate Charge at 10 V	$Q_{G(TOT)}$	V_{GS} = 10 V, V_{DS} = 400 V, I_D = 32.5 A (Note 6)		160		nC
Threshold Gate Charge	$Q_{G(TH)}$			28.9		
Gate−to−Source Gate Charge	Q_{GS}			47		
Gate−to−Drain “Miller” Charge	Q_{GD}			65		
Equivalent Series Resistance	ESR	f = 1 MHz		1.9		Ω
SWITCHING CHARACTERISTICS						
Turn-On Delay Time	$t_{d(on)}$	V_{GS} = 10 V, V_{DD} = 400 V, I_D = 32.5 A, R_g = 2.2 Ω (Note 6)		39		ns
Turn-On Rise Time	t_r			27		ns
Turn-Off Delay Time	$t_{d(off)}$			105		ns
Turn-Off Fall Time	t_f			7		ns
SOURCE−DRAIN DIODE CHARACTERISTICS						
Maximum Continuous Source−to−Drain Diode Forward Current	I_S	V_{GS} = 0 V			65	A
Maximum Pulsed Source−to−Drain Diode Forward Current	I_{SM}	V_{GS} = 0 V			162.5	A
Source−to−Drain Diode Forward Voltage	V_{SD}	V_{GS} = 0 V, I_{SD} = 32.5 A			1.3	V
Reverse Recovery Time	t_{rr}	V_{GS} = 0 V, dI_F/dt = 100 A/μs, I_{SD} = 32.5 A		145.9		ns
Charge Time	t_a			117.3		
Discharge Time	t_b			28.8		
Reverse Recovery Charge	Q_{rr}			744.5		nC

Product parametric performance is indicated in the Electrical Characteristics for the listed test conditions, unless otherwise noted. Product performance may not be indicated by the Electrical Characteristics if operated under different conditions.

6. Essentially independent of operating temperature typical characteristics.

Downloaded from Arrow.com.

TYPICAL CHARACTERISTICS

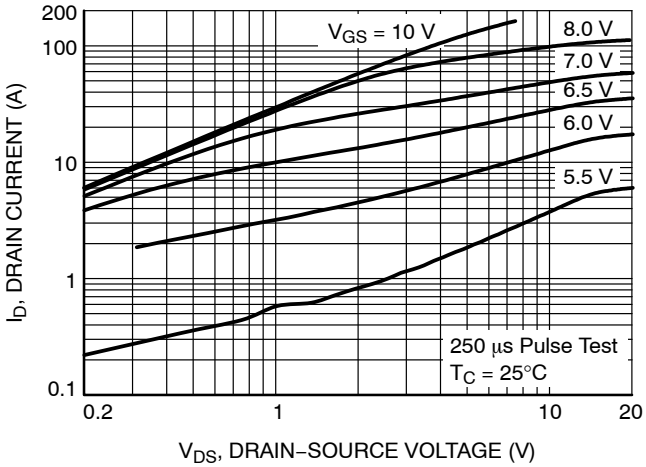

Figure 1. On−Region Characteristics

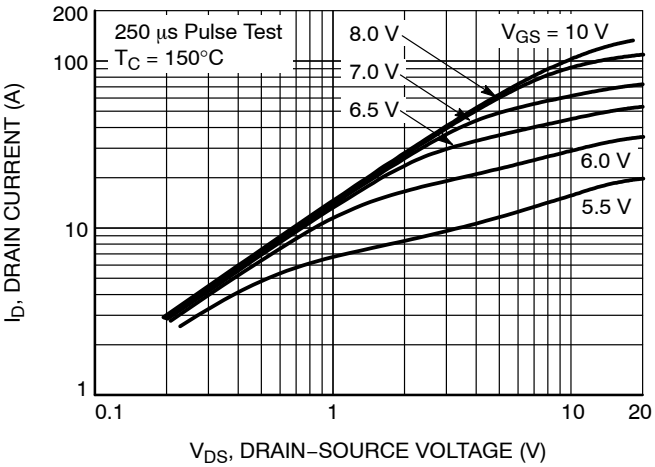

Figure 2. On−Region Characteristics

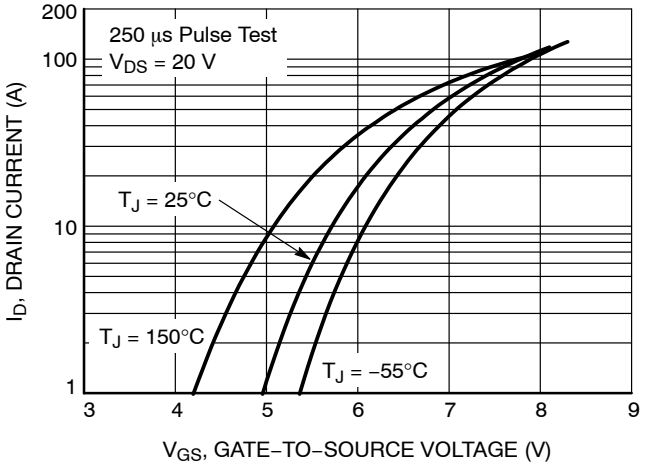

Figure 3. Transfer Characteristics

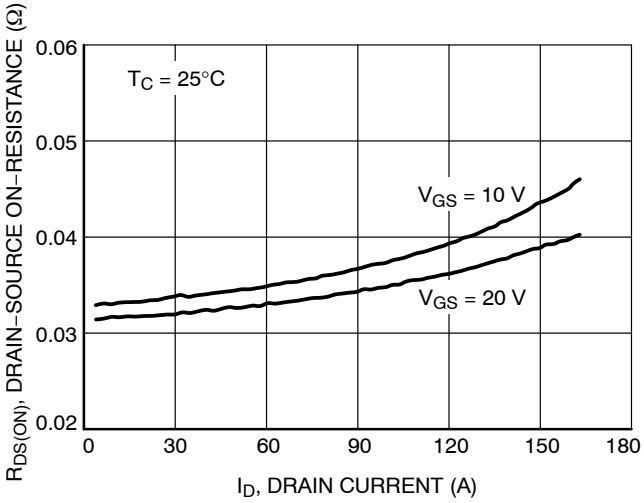

Figure 4. On−Resistance Variation vs. Drain Current and Gate Voltage

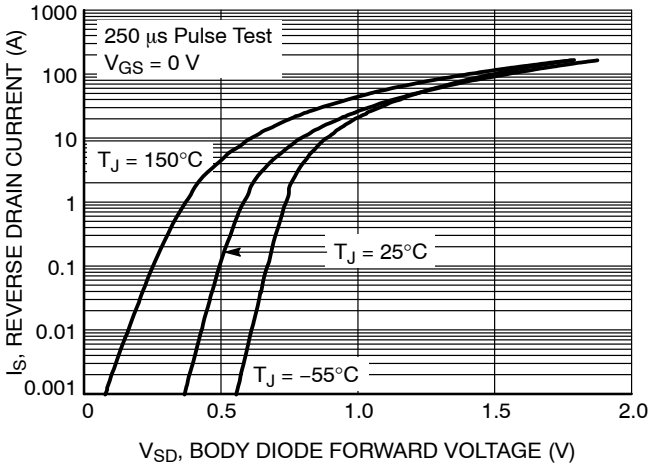

Figure 5. Body Diode Forward Voltage Variation vs. Source Current and Temperature

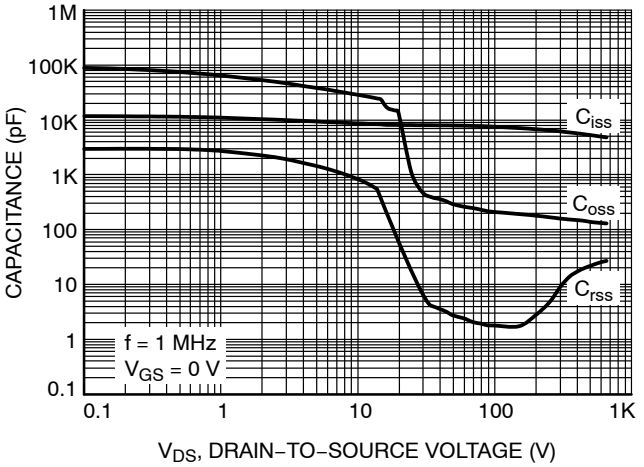

Figure 6. Capacitance Characteristics

Downloaded from Arrow.com.

TYPICAL CHARACTERISTICS

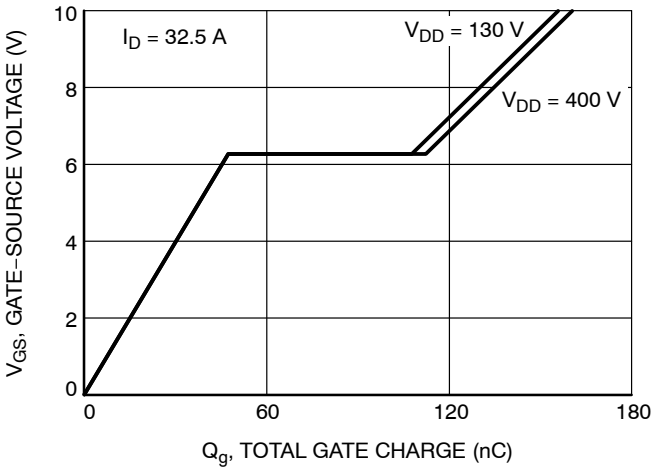

Figure 7. Gate Charge Characteristics

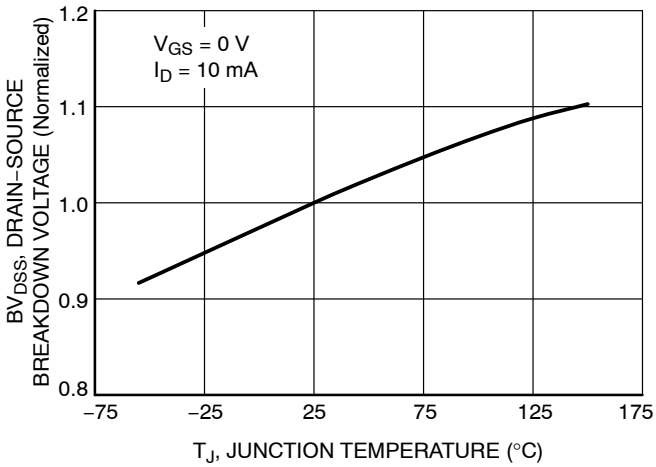

Figure 8. Breakdown Voltage Variation vs. Temperature

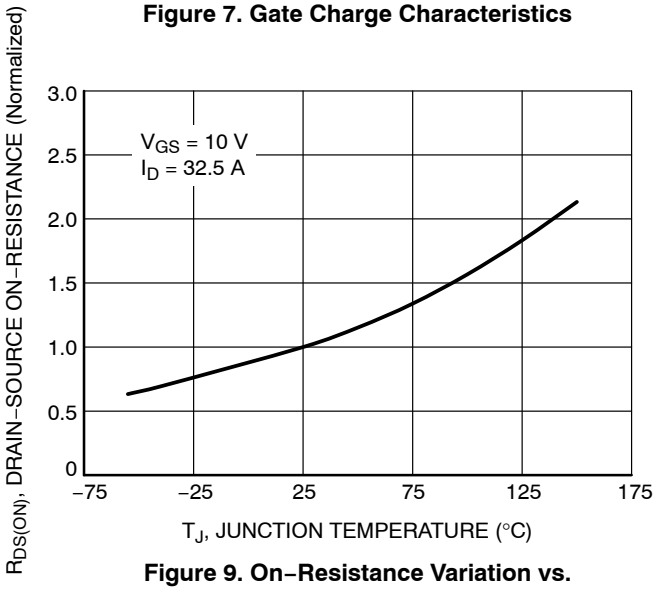

Figure 9. On−Resistance Variation vs. Temperature

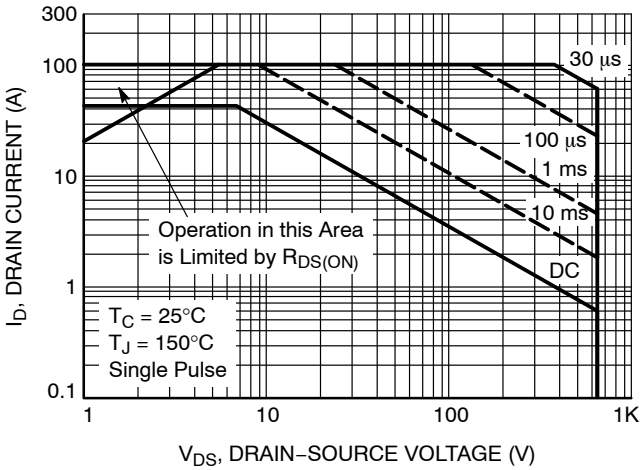

Figure 10. Maximum Safe Operating Area

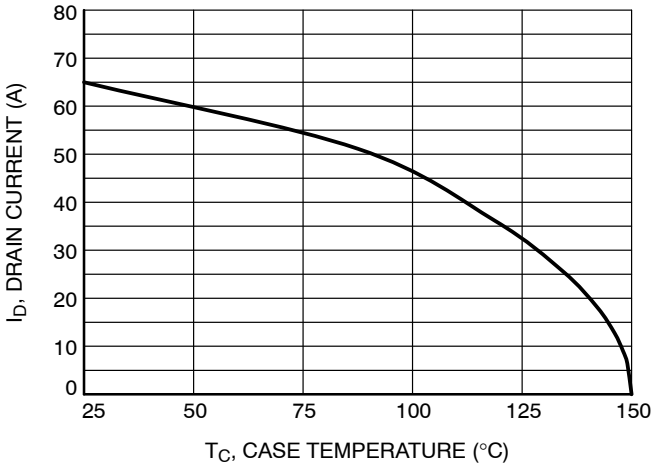

Figure 11. Maximum Drain Current vs. Case Temperature

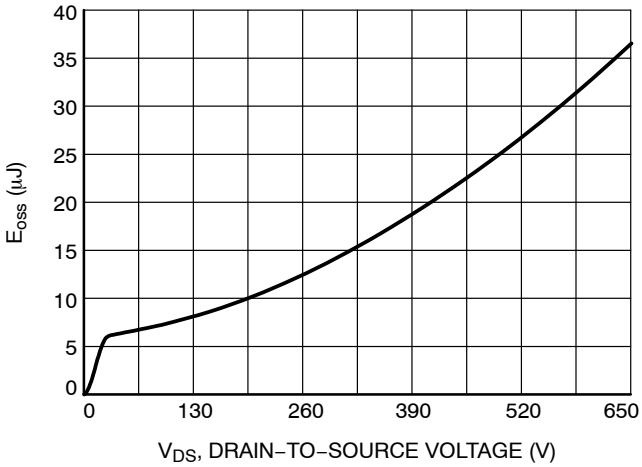

Figure 12. EOSS vs. Drain−to−Source Voltage

Downloaded from Arrow.com.

TYPICAL CHARACTERISTICS

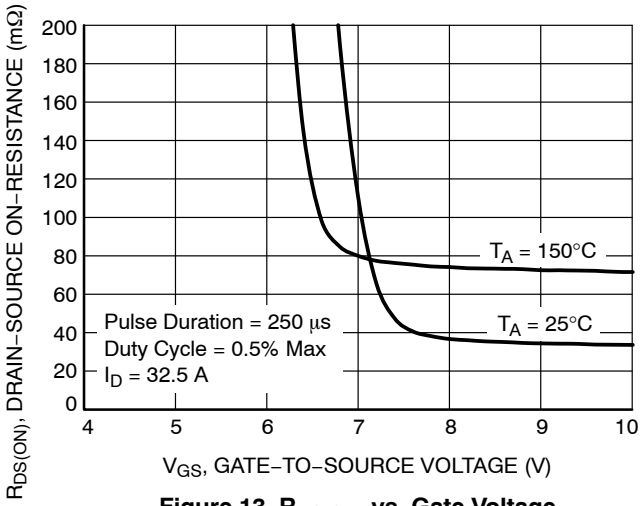

Figure 13. $R_{DS(ON)}$ vs. Gate Voltage

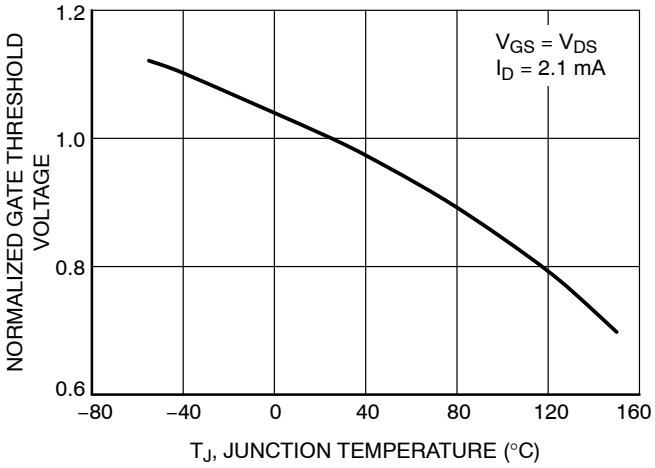

Figure 14. Normalized Gate Threshold Voltage vs. Temperature

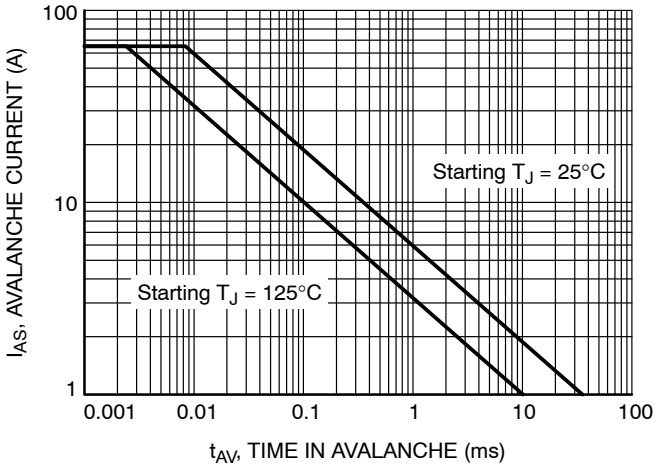

Figure 15. Unclamped Inductive Switching Capability

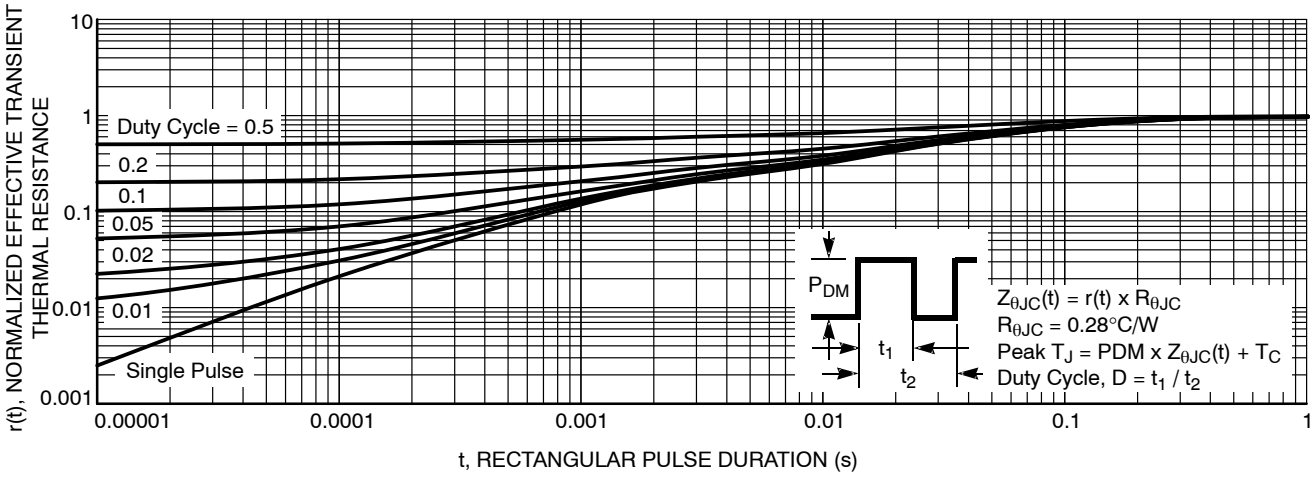

Figure 16. Transient Thermal Response Curve

Downloaded from Arrow.com.

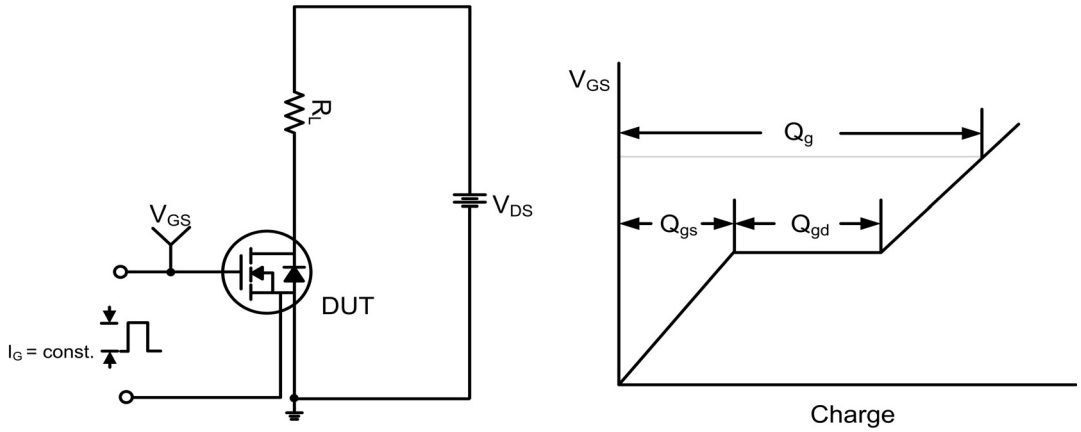

Figure 17. Gate Charge Test Circuit & Waveform

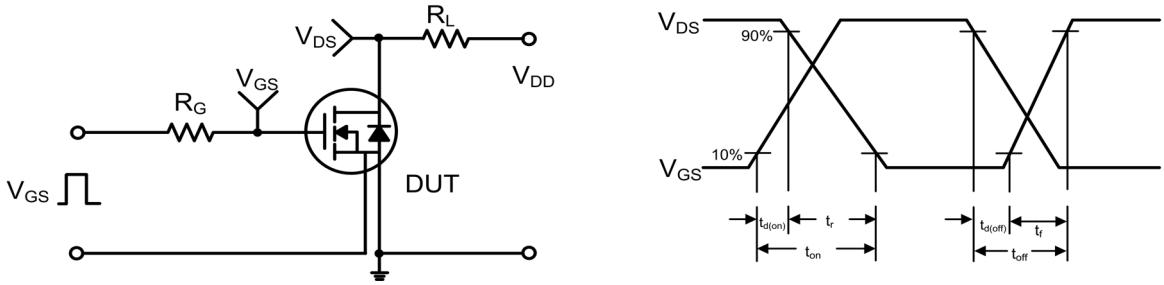

Figure 18. Resistive Switching Test Circuit & Waveforms

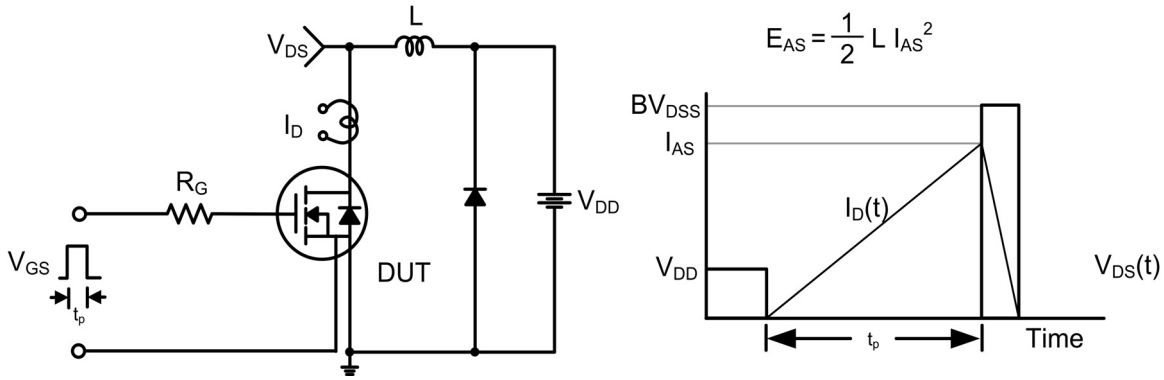

Figure 19. Unclamped Inductive Switching Test Circuit & Waveforms

Downloaded from Arrow.com.

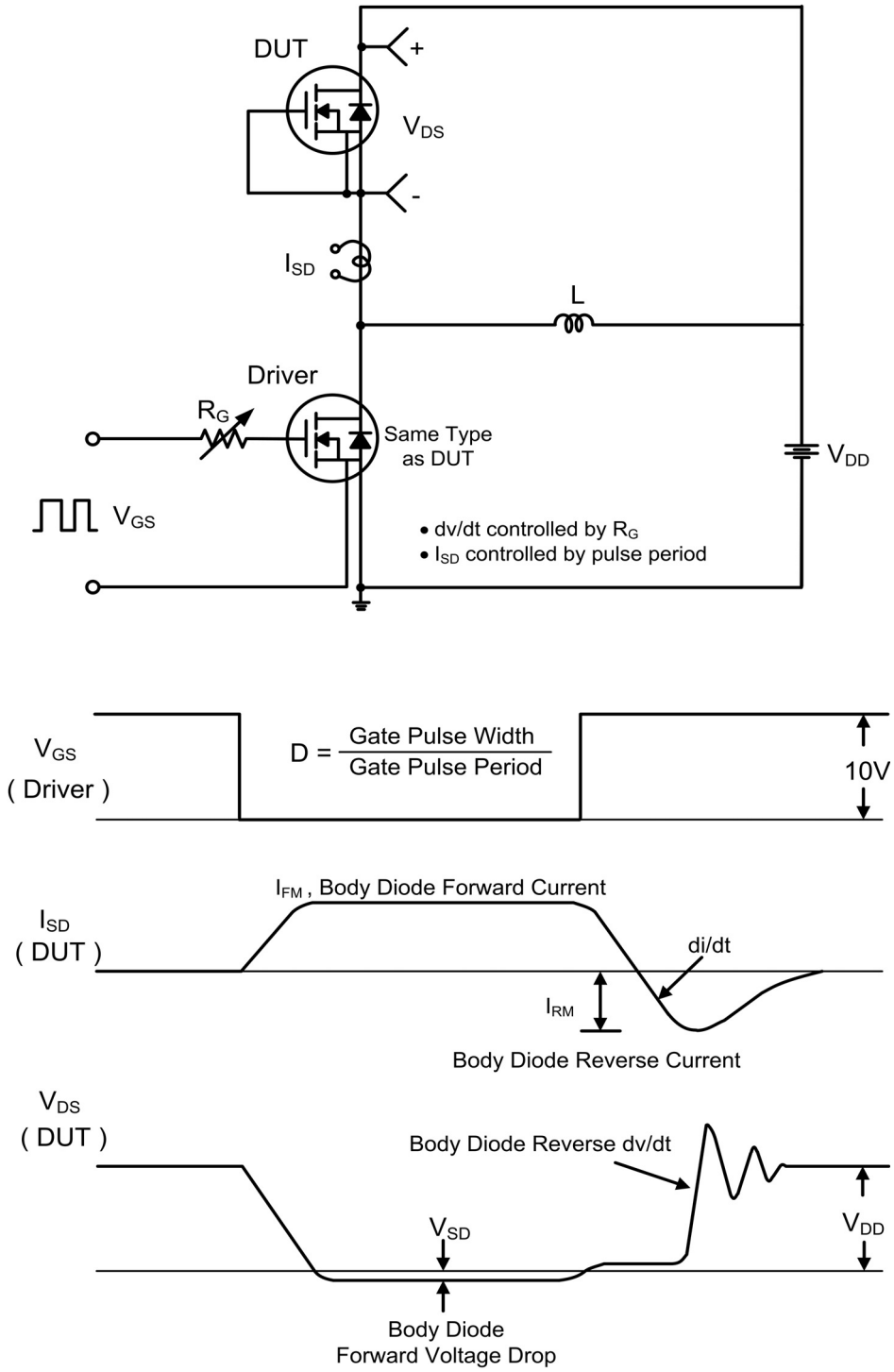

Figure 20. Peak Diode Recovery dv/dt Test Circuit & Waveforms

SUPERFET and FRFET are registered trademarks of Semiconductor Components Industries, LLC (SCILLC) or its subsidiaries in the United States and/or other countries.

Downloaded from Arrow.com.

PACKAGE DIMENSIONS

TO−247−4LD
CASE 340CJ
ISSUE A

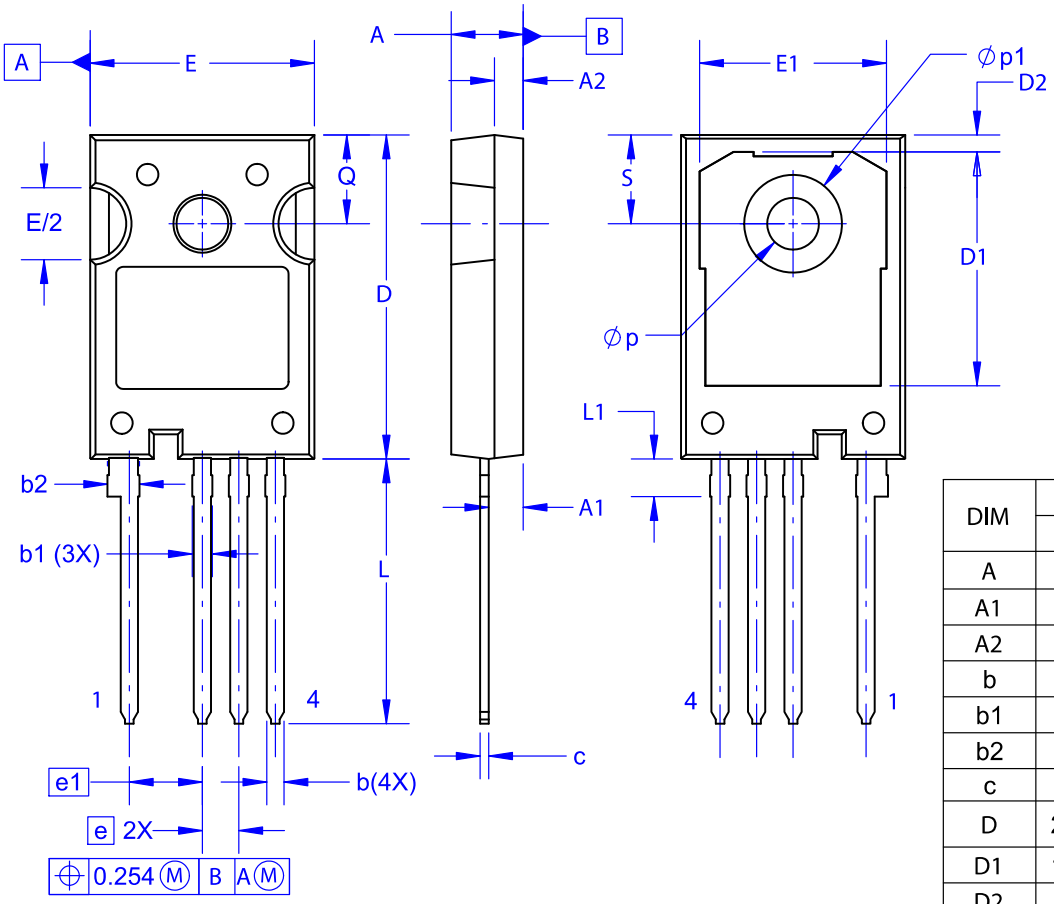

DIM	MILLIMETERS		
	MIN	NOM	MAX
A	4.80	5.00	5.20
A1	2.10	2.40	2.70
A2	1.80	2.00	2.20
b	1.07	1.20	1.33
b1	1.20	1.40	1.60
b2	2.02	2.22	2.42
c	0.50	0.60	0.70
D	22.34	22.54	22.74
D1	16.00	16.25	16.50
D2	0.97	1.17	1.37
e	2.54 BSC		
e1	5.08 BSC		
E	15.40	15.60	15.80
E1	12.80	13.00	13.20
E/2	4.80	5.00	5.20
L	18.22	18.42	18.62
L1	2.42	2.62	2.82
p	3.40	3.60	3.80
p1	6.60	6.80	7.00
Q	5.97	6.17	6.37
S	5.97	6.17	6.37

NOTES:

A. NO INDUSTRY STANDARD APPLIES TO THIS PACKAGE.
B. DIMENSIONS ARE EXCLUSIVE OF BURRS,MOLD FLASH,AND TIE BAR EXTRUSIONS.
C. ALL DIMENSIONS ARE IN MILLIMETERS.
D. DRAWING CONFORMS TO ASME Y14.5-2009.

Downloaded from Arrow.com.

ON Semiconductor and ON are trademarks of Semiconductor Components Industries, LLC dba ON Semiconductor or its subsidiaries in the United States and/or other countries. ON Semiconductor owns the rights to a number of patents, trademarks, copyrights, trade secrets, and other intellectual property. A listing of ON Semiconductor's product/patent coverage may be accessed at www.onsemi.com/site/pdf/Patent−Marking.pdf. ON Semiconductor reserves the right to make changes without further notice to any products herein. ON Semiconductor makes no warranty, representation or guarantee regarding the suitability of its products for any particular purpose, nor does ON Semiconductor assume any liability arising out of the application or use of any product or circuit, and specifically disclaims any and all liability, including without limitation special, consequential or incidental damages. Buyer is responsible for its products and applications using ON Semiconductor products, including compliance with all laws, regulations and safety requirements or standards, regardless of any support or applications information provided by ON Semiconductor. "Typical" parameters which may be provided in ON Semiconductor data sheets and/or specifications can and do vary in different applications and actual performance may vary over time. All operating parameters, including "Typicals" must be validated for each customer application by customer's technical experts. ON Semiconductor does not convey any license under its patent rights nor the rights of others. ON Semiconductor products are not designed, intended, or authorized for use as a critical component in life support systems or any FDA Class 3 medical devices or medical devices with a same or similar classification in a foreign jurisdiction or any devices intended for implantation in the human body. Should Buyer purchase or use ON Semiconductor products for any such unintended or unauthorized application, Buyer shall indemnify and hold ON Semiconductor and its officers, employees, subsidiaries, affiliates, and distributors harmless against all claims, costs, damages, and expenses, and reasonable attorney fees arising out of, directly or indirectly, any claim of personal injury or death associated with such unintended or unauthorized use, even if such claim alleges that ON Semiconductor was negligent regarding the design or manufacture of the part. ON Semiconductor is an Equal Opportunity/Affirmative Action Employer. This literature is subject to all applicable copyright laws and is not for resale in any manner.

PUBLICATION ORDERING INFORMATION

LITERATURE FULFILLMENT:
Email Requests to: orderlit@onsemi.com

ON Semiconductor Website: www.onsemi.com

TECHNICAL SUPPORT
North American Technical Support:
Voice Mail: 1 800−282−9855 Toll Free USA/Canada
Phone: 011 421 33 790 2910

Europe, Middle East and Africa Technical Support:
Phone: 00421 33 790 2910
For additional information, please contact your local Sales Representative

◊

Downloaded from Arrow.com.