1775026-1 Product Details

Live Product Chat

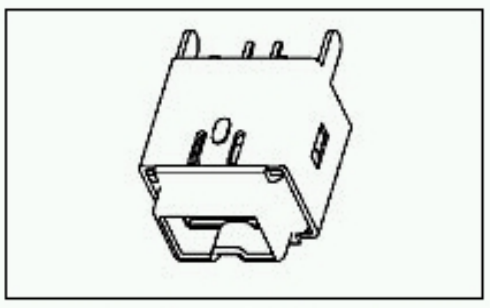

1775026-1

TE Part Number: 1775026-1

Active

Add to Part List

Connector System For IEEE1394 Serial Bus

Always EU RoHS/ELV Compliant (Statement of Compliance)

Product Highlights:

- Connector
- Number of Positions = 4
- Tray
- Mount Type = DIP Type
- PCB Mount Angle = Vertical

View all Features | Find Similar Products

Quick Links

- Check Pricing & Availability
- Search for Tooling
- Product Feature Selector
- Contact Us About This Product
- Request Samples NEW!

Documentation & Additional Information

Product Drawings:

- MINI IEEE 1394 4P, VERTICAL TYPE (PDF, English)

Catalog Pages/Data Sheets:

- None Available

Product Specifications:

- None Available

Application Specifications:

- None Available

Instruction Sheets:

- None Available

CAD Files: (CAD Format & Compression Information)

- 2D Drawing (DXF, Version O)
- 3D Model (IGES, Version O)
- 3D Model (STEP, Version O)

List all Documents

Additional Information:

- Product Line Information

Related Products:

- Tooling

Product Features (Please use the Product Drawing for all design activity)

Product Type Features:

- Product Type = Connector
- Number of Positions = 4
- PCB Mount Angle = Vertical
- Receptacle Style = Low Profile
- Gender = Receptacle
- Shell Material = Brass

Termination Related Features:

- Termination (Solder) Post Length (mm [in]) = 2.50 [0.099]
- Solder Tail Contact Plating = Tin over Nickel

Body Related Features:

- Mount Type = DIP Type
- Cover Color = Black
- Shell Plating = Nickel

Contact Related Features:

- Assembled = Yes
- Contact Material = Phosphor Bronze
- Contact Mating Area Plating Material = Gold (30) over Nickel (50)

Housing Related Features:

- Housing Material = Thermoplastic Glass Reinforced
- Housing Flammability Rating = UL 94V-0

Industry Standards:

- RoHS/ELV Compliance = RoHS compliant, ELV compliant
- Lead Free Solder Processes = Reflow solder capable to 245°C, Reflow solder capable to 260°C
- RoHS/ELV Compliance History = Always was RoHS compliant

Packaging Related Features:

- Packaging Method = Tray
- Packaging Quantity = 200

Other:

- Brand = AMP

© 2008 Tyco Electronics Corporation All Rights Reserved

Downloaded from Arrow.com.