PART NUMBER
424EN222-RB
CUSTOMER PART NO. 2629E4582-1

REVISION HISTORY					
REV	DOCUMENT	DESCRIPTION	CHG'D BY	DATE	APPROVED
D	0098684	ADDED VIEW DETAIL A, NOTE-8	RKA	2013-03-07	T. DAN

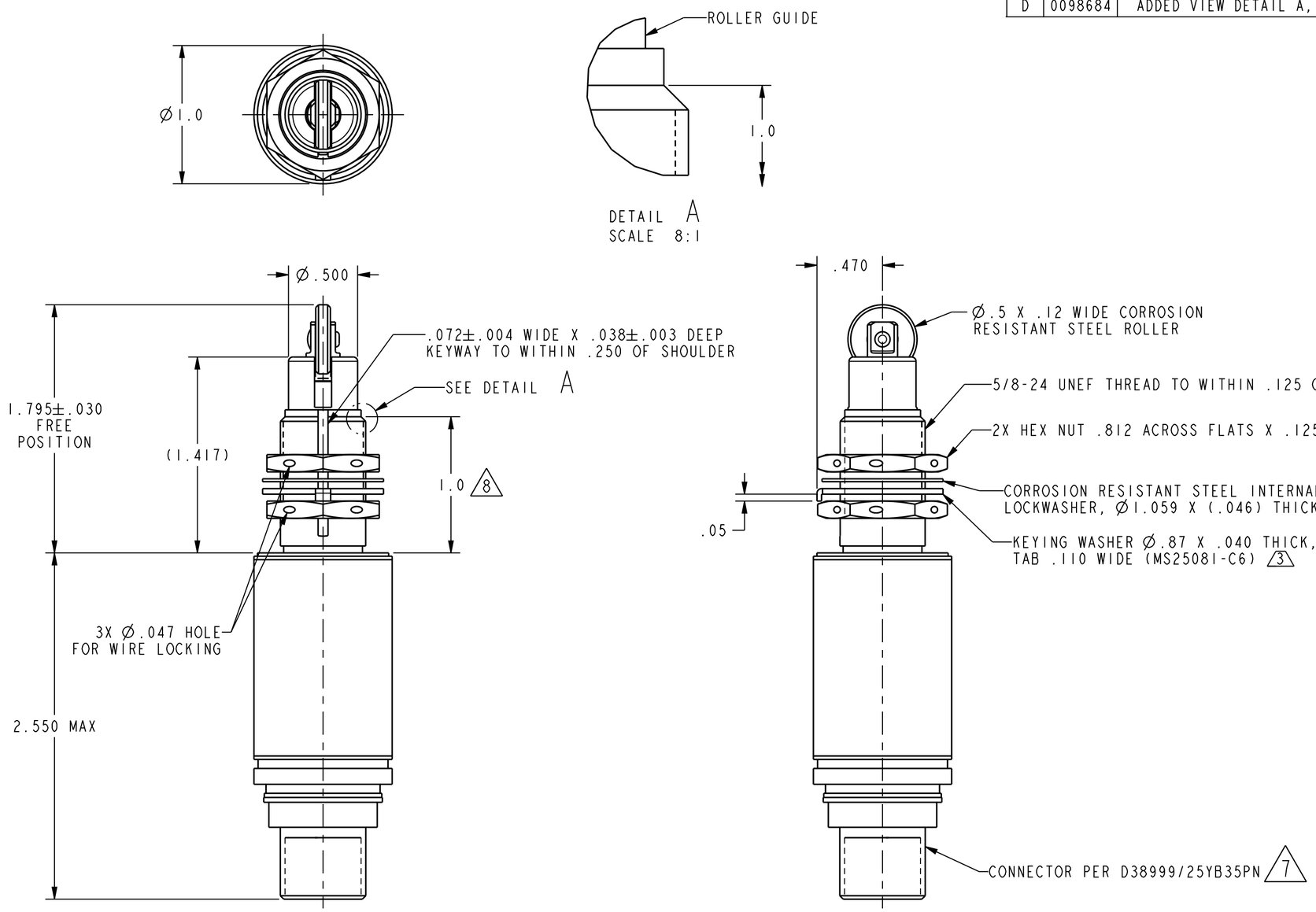

NOTES:
1 - CORROSION RESISTANT STEEL ENCLOSURE
2 - SWITCH SEALED PER MIL-PRF-8805 SYMBOL 4
3 HARDWARE MAY BE PACKAGED UNASSEMBLED PER MIL-PRF-8805
4 - CATALOG LISTING, DATE CODE, FED.MFG CODE, CUSTOMER PART NUMBER, SERIAL NUMBER AND CIRCUIT DIAGRAM ARE PERMANENTLY MARKED ON SWITCH HOUSING
5 - COINCIDENCE OF OPERATING AND RELEASING POINTS: .010 INCH OF PLUNGER TRAVEL
6 GOLD CONTACT BASIC SWITCHES
7 CONNECTOR MAIN POLARIZING KEYWAY (180°) FROM BUSHING KEYWAY
8 SURFACE SHALL MEET 2.5 MILLIOHMS MAX PER JOINT; VALIDATED IN HONEYWELL REPORT #86183

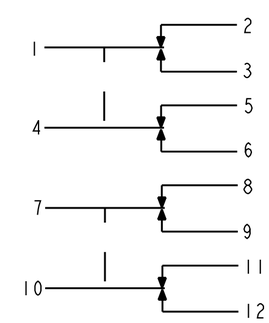

CIRCUIT DIAGRAM

CHARACTERISTICS	
OPERATING FORCE	6-12 LB
FULL OVERTRAVEL FORCE	30 LB MAX
RELEASE FORCE	4 LB MIN
PRETRAVEL	.040 MAX
DIFFERENTIAL TRAVEL	.020 MAX
OVERTRAVEL	.250 MIN

ELECTRICAL DATA

CONTACT ARRANGEMENT 6
4X S P D T

LOAD	28 VDC	
	SEA LEVEL	50,000 FT
RES	1.0	1.0
IND	0.5	0.5

UNLESS OTHERWISE SPECIFIED
DIMENSIONS ARE IN INCHES
DECIMAL TOL NO PLACE ---- -
1 PLACE --- ±.030
2 PLACE --- ±.015
3 PLACE --- ±.005
ANGULAR TOL - - CHAMFER - -

THIRD ANGLE PROJECTION

MATERIAL - -
FINISH - -

APPLICABLE DOCUMENTS: ASME Y14.100-2004
ASME Y14.5-2009

COMPUTER GENERATED DRAWING: PRO/ENGINEER

Honeywell

TITLE **SWITCH - ENCLOSED**

SIZE	CAGE CODE	DWG NO	TYPE	REV
C	-	424EN222-RB	I	D

SCALE 3:2 REF WT: .46 LBS MAX SHEET 1 of 1

RELEASE DATE	2005-03-23
DRW: DVM	2005-03-23
RDE: -	-
QA: -	-
CHK: AK	2005-03-23

HONEYWELL CONFIDENTIAL
THIS DOCUMENT CONTAINS PROPRIETARY INFORMATION AND SUCH INFORMATION MAY NOT BE DISCLOSED TO OTHERS FOR ANY PURPOSE, NOR USED FOR MANUFACTURING PURPOSE'S WITHOUT WRITTEN PERMISSION FROM HONEYWELL

Downloaded from Arrow.com.