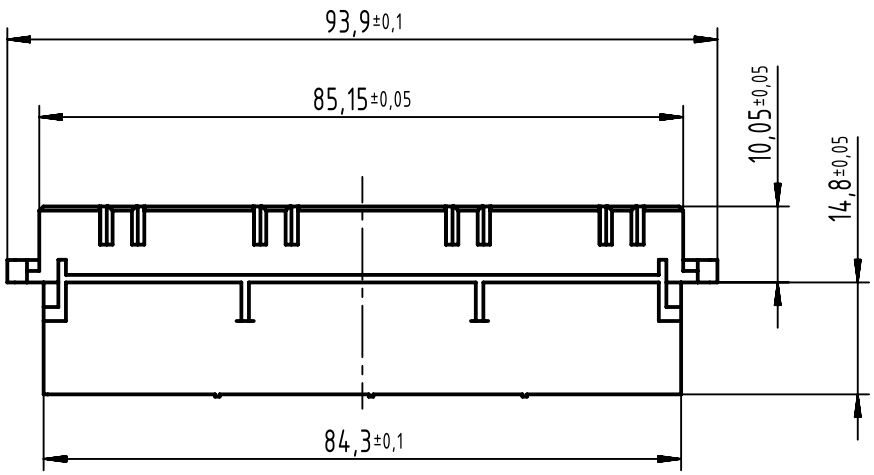

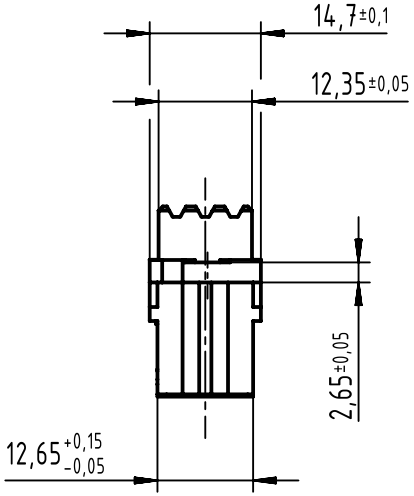

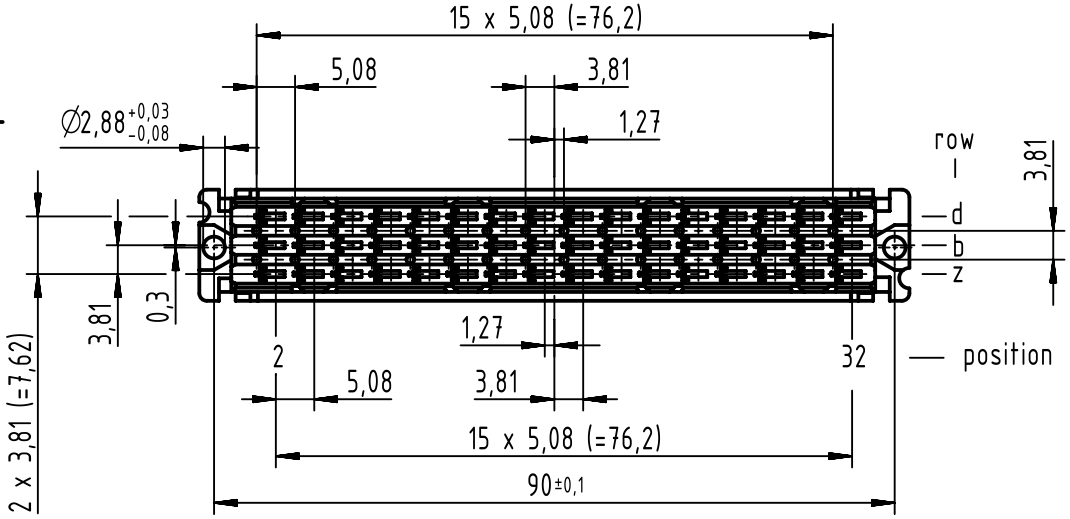

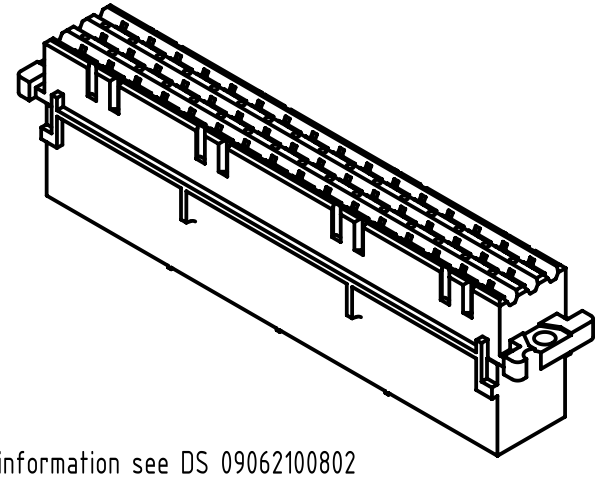

further information see DS 09062100802

All Dimensions in mm Original Size DIN A4	Scale 1:1	Free size tol. IEC 60603-2		Ref. Sub. TB 09062483201 / 500000097582 / 2015-11-26	
All rights reserved Department EC PD - DE	Created by STORCK	Inspected by LEHNERT	Standardisation HOFFMANN	Date 2016-07-25	State Final Release
HARTING Electronics GmbH D-32339 Espelkamp	Title DIN Power type F female connector crimp				Doc-Key / ECM-Nr. 100184756/UGD/007/F 500000106785
	Type TB	Number 09062483201		Rev. F	Page 1/1

Downloaded from Arrow.com.

A4