Data Sheet

HSMx-A10x-xxxxx

PLCC-2, Surface-Mount LED Indicator

Description

This family of Broadcom® SMT LEDs is packaged in the industry-standard PLCC-2 package. These SMT LEDs have high-reliability performance and are designed to work under a wide range of environmental conditions. This high-reliability feature makes them ideally suited to be used under harsh interior automotive conditions, as well as interior sign application conditions.

To facilitate easy pick-and-place assembly, the LEDs are packed in EIA-compliant tape and reel. Every reel will be shipped in single intensity and color bin, except the red color, to provide close uniformity.

These LEDs are compatible with IR solder reflow process.

The super wide viewing angle at 120° makes these LEDs ideally suited for panel, push button, or general backlighting in automotive interior, office equipment, industrial equipment, and home appliances. The flat top emitting surface makes it easy for these LEDs to mate with light pipes. With the built-in reflector pushing up the intensity of the light output, these LEDs are also suitable to be used as LED pixels in interior electronic signs.

Features

- Industry-standard PLCC-2 package
- High-reliability LED package
- High brightness using AlInGaP and InGaN dice technologies
- Available in full selection of colors
- Super wide viewing angle at 120°
- Available in 8-mm carrier tape on 7-in. reel (2000 pieces)
- Compatible with IR soldering process

Applications

- Interior automotive
  - Instrument panel backlighting
  - Central console backlighting
  - Switch/push button backlighting
- Electronic signs and signals
  - Interior full color sign
  - Variable message sign
- Office automation, home appliances, industrial equipment
  - Front panel backlighting
  - Push button backlighting
  - Display backlighting

CAUTION! HSMN, M, and E-A10x-xxxxx LEDs are Class 2 ESD sensitive. Please observe appropriate precautions during handling and processing. Refer to Broadcom Application Note AN-1142 for additional details.

Downloaded from Arrow.com.

Package Dimensions

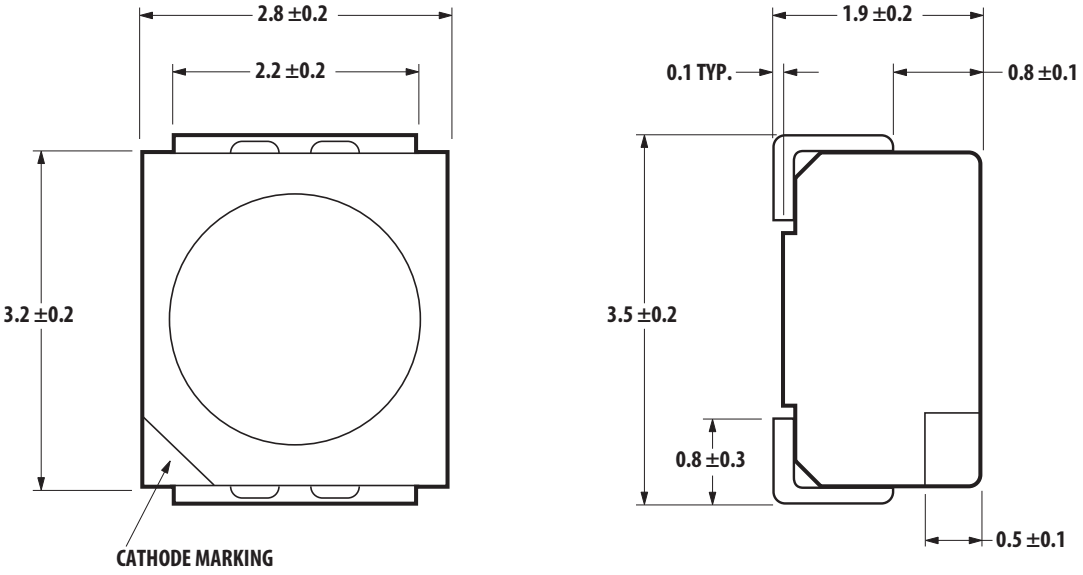

NOTE: ALL DIMENSIONS IN MILLIMETERS.

Device Selection Guide

Red

Part Number	Min. IV (mcd)	Typ. IV (mcd)	Max. IV (mcd)	Test Current (mA)
HSMS-A100-J00J1	4.50	15.00	—	20
HSMS-A100-L00J1	11.20	15.00	—	20
HSMS-A100-L50J2	11.20	—	35.5	10
HSMH-A100-L00J1	11.20	46.0	—	20
HSMH-A100-N00J1	28.50	50.00	—	20
HSMC-A100-Q00J1	71.50	100.00	—	20
HSMC-A100-R00J1	112.50	140.00	—	20
HSMC-A101-S00J1	180.00	220.00	—	20
HSMZ-A100-T00J1	285.00	350.00	—	20
HSMC-A100-Q70J1	90.00	—	180.0	20
HSMC-A101-S30J1	180.00	—	355.0	20
HSMC-A101-S40J1	180.00	—	450.0	20
HSMZ-A100-R00J1	112.50	—	—	20
HSMZ-A100-T70J1	355.00	—	715.0	20

Downloaded from Arrow.com.

Red Orange

Part Number	Min. IV (mcd)	Typ. IV (mcd)	Max. IV (mcd)	Test Current (mA)
HSMJ-A100-Q00J1	71.50	100.00	—	20
HSMJ-A101-S00J1	180.00	200.00	—	20
HSMJ-A100-T40J1	285.00	—	715.00	20
HSMV-A100-T00J1	285.00	350.00	—	20
HSMJ-A100-R40J1	112.50	—	285.00	20

Orange

Part Number	Min. IV (mcd)	Typ. IV (mcd)	Max. IV (mcd)	Test Current (mA)
HSMD-A100-J00J1	4.50	23.0	—	20
HSMD-A100-L00J1	11.20	23.0	—	20
HSMD-A100-L8PJ2	14.0	—	35.5	10
HSML-A100-Q00J1	71.50	100.00	—	20
HSML-A101-S00J1	180.00	220.00	—	20

Yellow/Amber

Part Number	Min. IV (mcd)	Typ. IV (mcd)	Max. IV (mcd)	Test Current (mA)
HSMY-A100-J00J1	4.50	12.00	—	20
HSMY-A100-L00J1	11.20	12.00	—	20
HSMA-A100-Q00J1	71.50	100.00	—	20
HSMA-A101-S00J1	180.00	220.00	—	20
HSMU-A100-S00J1	180.00	320.00	—	20
HSMA-A101-R8WJ1	140.00	—	355.00	20
HSMA-A100-R40J1	112.50	—	285.00	20
HSMA-A100-R45J1	12.50	—	285.00	20
HSMA-A101-S3WJ1	180.00	—	355.00	20

Yellow Green

Part Number	Min. IV (mcd)	Typ. IV (mcd)	Max. IV (mcd)	Test Current (mA)
HSMG-A100-J02J1	4.50	20.0	—	20
HSMG-A100-L32J2	11.20	—	22.4	10
HSMG-A100-K82J2	9.0	—	22.4	10
HSMG-A100-L02J1	11.20	20.0	—	20
HSME-A100-M02J1	18.00	70.00	—	20
HSME-A100-N82J1	35.50	—	90.00	20
HSME-A100-P32J1	45.0	—	90.0	20

Downloaded from Arrow.com.

Emerald Green

Part Number	Min. IV (mcd)	Typ. IV (mcd)	Max. IV (mcd)	Test Current (mA)
HSMG-A100-H01J1	2.80	25.0	—	20
HSME-A100-L01J1	11.20	40.00	—	20
HSME-A100-M3PJ1	18.00	—	35.50	20

Green

Part Number	Min. IV (mcd)	Typ. IV (mcd)	Max. IV (mcd)	Test Current (mA)
HSMM-A101-R00J1	112.50	200.00	—	20
HSMM-A100-S00J1	180.00	350.00	—	20
HSMM-A100-U4PJ1	450.00	—	1125.00	20

Blue

Part Number	Min. IV (mcd)	Typ. IV (mcd)	Max. IV (mcd)	Test Current (mA)
HSMN-A101-N00J1	28.50	50.00	—	20
HSMN-A100-P00J1	45.00	70.00	—	20
HSMN-A100-S4YJ1	180.00	—	450.00	20
HSMN-A100-R8YJ1	140.00	—	355.00	20
HSMN-A100-R00J1	112.50	—	—	20

Absolute Maximum Ratings (T_A = 25°C)

Parameters	HSMS/D/Y/G/H	HSMC/J/L/A	HSME	HSMZ/V/U	HSMM/N
DC Forward Current[a]	30 mA	30 mA[b, c]	20 mA[c]	30 mA[b, c]	30 mA
Peak Forward Current[d]	100 mA	100 mA	100 mA	100 mA	100 mA
Power Dissipation	78 mW	72 mW	48 mW	72 mW	120 mA
Reverse Voltage	5V				
Junction Temperature	110°C				
Operating Temperature	–55°C to +100°C				
Storage Temperature	–55°C to +100°C				

a. Derate linearly as shown in Figure 6.

b. Drive current between 10 mA and 30 mA is recommended for best long term performance.

c. Operation at current below 5 mA is not recommended.

d. Duty factor = 10%, frequency = 1 kHz.

Downloaded from Arrow.com.

Optical Characteristics (T_A = 25°C)

Color	Part Number	Peak Wavelength λ_{PEAK} (nm) Typ.	Dominant Wavelength[a] λ_D (nm) Typ.	Viewing Angle 2 $\theta_{1/2}$[b] (Degrees) Typ.	Luminous Efficacy η_v[c] (l_m/W) Typ.	Luminous Intensity/Total Flux I_v (mcd)/ Φ_v(mlm) Typ.
Red	HSMS-A100	632	626	120	200	0.45
	HSMH-A100	652	637	120	85	0.45
	HSMC-A10x	635	626	120	150	0.45
	HSMZ-A100	635	626	120	155	0.45
Red Orange	HSMJ-A10x	621	615	120	240	0.45
	HSMV-A100	623	617	120	263	0.45
Orange	HSMD-A100	610	605	120	350	0.45
	HSML-A10x	609	605	120	320	0.45
Amber	HSMY-A100	590	589	120	510	0.45
	HSMA-A10x	592	590	120	480	0.45
	HSMU-A100	594	592	120	500	0.45
Yellow Green	HSMG-A100	573	570	120	560	0.45
	HSME-A100	575	570	120	560	0.45
Emerald Green	HSMG-A100	561	560	120	660	0.45
	HSME-A100	566	560	120	610	0.45
Green	HSMM-A10x	523	525	120	500	0.45
Blue	HSMN-A10x	468	470	120	75	0.45

a. The dominant wavelength, λ_D, is derived from the CIE Chromaticity Diagram and represents the color of the device.

b. $\theta_{1/2}$ is the off -axis angle where the luminous intensity is 1/2 the peak intensity.

c. Radiant intensity, Ie in watts/steradian, may be calculated from the equation Ie = I_v/η_v, where I_v is the luminous intensity in candelas and η_v is the luminous efficacy in lumens/watt.

Electrical Characteristics (T_A = 25°C)

Part Number	Forward Voltage V_F (Volts) at I_F = 20 mA		Reverse Voltage V_R at 100 µA Min.	Reverse Voltage V_R at 10 µA Min.	Thermal Resistance $R\theta_{JP}$ (°CW)
	Typ.	Max.			
HSMH/S/D/Y/G	2.0	2.6	5	—	180
HSMC/J/L/A/E	1.9	2.4	5	—	280
HSMZ/V/U	1.9	2.4	5	—	280
HSMM/N	3.4	4.05	—	5	280

Downloaded from Arrow.com.

Part Numbering System

H	S	M	x_1	-	A	x_2	x_3	x_4	-	x_5	x_6	x_7	x_8	x_9

Code	Description	Option	
x_1	LED Chip Color	H	Deep Red
		C/H/S/Z	Red
		J/V	Red Orange
		D/L	Orange
		A/U/Y	Amber/ Yellow
		E/G	Yellow Green/Emerald Green
		M	InGaN Green
		N	InGaN Blue
x_2	Package Type	1	Mono color
x_3x_4	Device Specific Configuration	—	
x_5	Minimum Intensity Bin Selection	Refer to the Intensity Bin Select (x_5x_6).	
x_6	Number of Intensity Bins		
x_7	Color Bin Selection	Refer to Color Bin Select (x_7).	
x_8x_9	Packaging Option	J1	20-mA test current, top mount, 7-inch reel
		J2	10-mA test current, top mount, 7-inch reel
		L2	2-mA test current, top mount, 7-inch reel

Downloaded from Arrow.com.

Bin Information

Intensity Bin Select (x_5x_6)

Individual reel will contain parts from one half bin only.

X_5	Min. I_V Bin
X_6	
0	Full Distribution
2	2 half bins starting from $X_5$1
3	3 half bins starting from $X_5$1
4	4 half bins starting from $X_5$1
5	5 half bins starting from $X_5$1
6	2 half bins starting from $X_5$2
7	3 half bins starting from $X_5$2
8	4 half bins starting from $X_5$2
9	5 half bins starting from $X_5$2

Intensity Bin Limits

Bin ID	Min. (mcd)	Max. (mcd)
G1	1.80	2.24
G2	2.24	2.80
H1	2.80	3.55
H2	3.55	4.50
J1	4.50	5.60
J2	5.60	7.20
K1	7.20	9.00
K2	9.00	11.20
L1	11.20	14.00
L2	14.00	18.00
M1	18.00	22.40
M2	22.40	28.50
N1	28.50	35.50
N2	35.50	45.00
P1	45.00	56.00
P2	56.00	71.50
Q1	71.50	90.00
Q2	90.00	112.50
R1	112.50	140.00
R2	140.00	180.00
S1	180.00	224.00
S2	224.00	285.00
T1	285.00	355.00
T2	355.00	450.00
U1	450.00	560.00
U2	560.00	715.00
V1	715.00	900.00
V2	900.00	1125.00
W1	1125.00	1400.00
W2	1400.00	1800.00
X1	1800.00	2240.00
X2	2240.00	2850.00

Tolerance of each bin limit = ±12%

Color Bin Select (x_7)

Individual reel will contain parts from one full bin only.

X_7	
0	Full distribution
Z	A and B only
Y	B and C only
W	C and D only
V	D and E only
U	E and F only
T	F and G only
S	G and H only
Q	A, B, and C only
P	B, C, and D only
N	C, D, and E only
M	D, E, and F only
L	E, F, and G only
K	F, G, and H only
1	A, B, C, and D only
2	E, F, G, and H only
3	B, C, D, and E only
4	C, D, E, and F only
5	A, B, C, D, and E only
6	B, C, D, E, and F only

Packaging Option (X_8X_9)

Option	Test Current	Package Type	Reel Size
J1	20 mA	Top Mount	7 in.
J2	10 mA	Top Mount	7 in.
L2	2 mA	Top Mount	7 in.

Downloaded from Arrow.com.

Color Bin Limits

Color	Min. (nm)	Max. (nm)
Blue		
A	460.0	465.0
B	465.0	470.0
C	470.0	475.0
D	475.0	480.0
Green		
A	515.0	520.0
B	520.0	525.0
C	525.0	530.0
D	530.0	535.0
Emerald Green		
A	552.5	555.5
B	555.5	558.5
C	558.5	561.5
D	561.5	564.5
Yellow Green		
E	564.5	567.5
F	567.5	570.5
G	570.5	573.5
H	573.5	576.5
Amber		
A	582.0	584.5
B	584.5	587.0
C	587.0	589.5
D	589.5	592.0
E	592.0	594.5
F	594.5	597.0
Orange		
A	597.0	600.0
B	600.0	603.0
C	603.0	606.0
D	606.0	609.0
E	609.0	612.0
Red Orange		
A	611.0	616.0
B	616.0	620.0
Red		
—	618.0	635.0

Tolerance for each bin limit is ±1 nm.

Downloaded from Arrow.com.

Figure 1: Relative Intensity vs. Wavelength

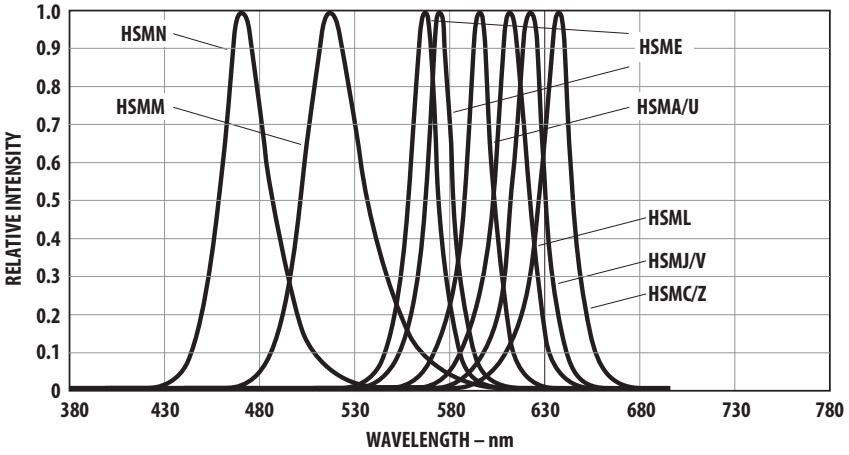

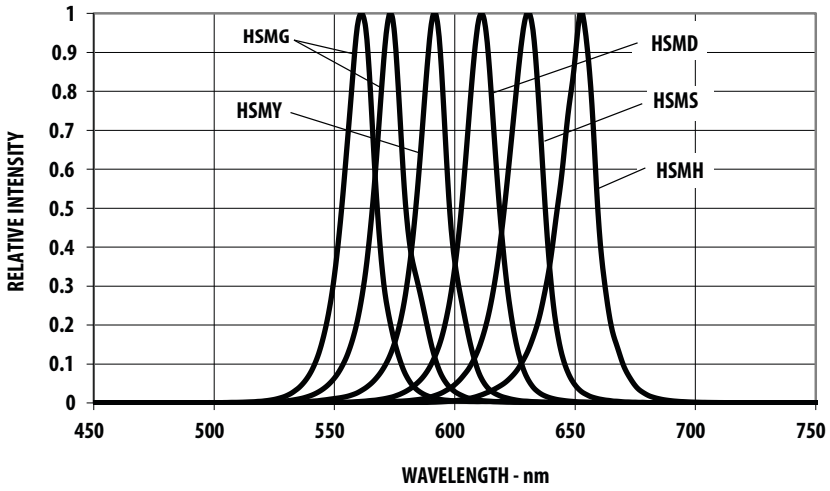

Figure 2: Forward Current vs. Forward Voltage

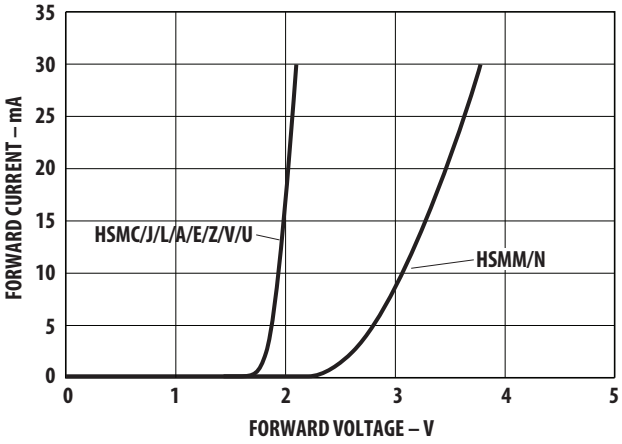

Figure 3: Forward Current vs. Forward Voltage

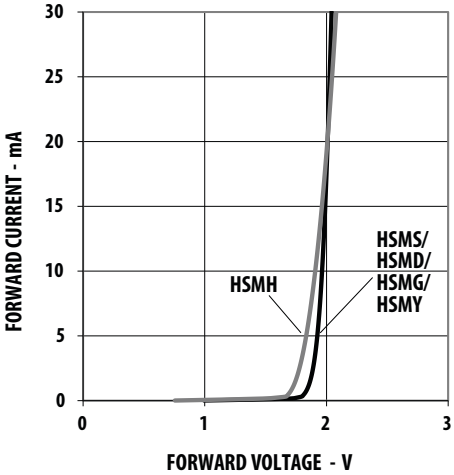

Downloaded from Arrow.com.

Figure 4: Relative Intensity vs. Forward Current

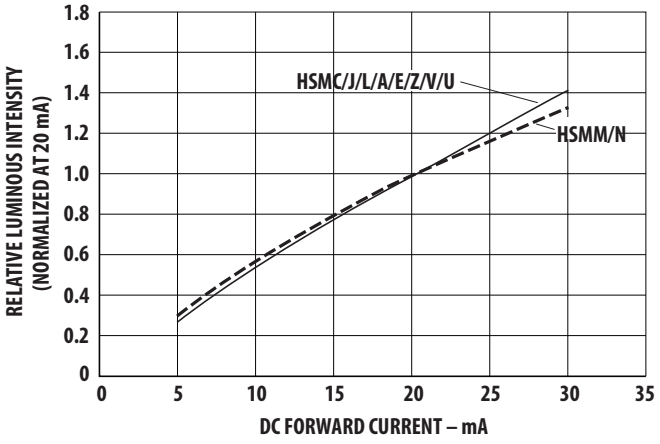

Figure 5: Relative Intensity vs. Forward Current

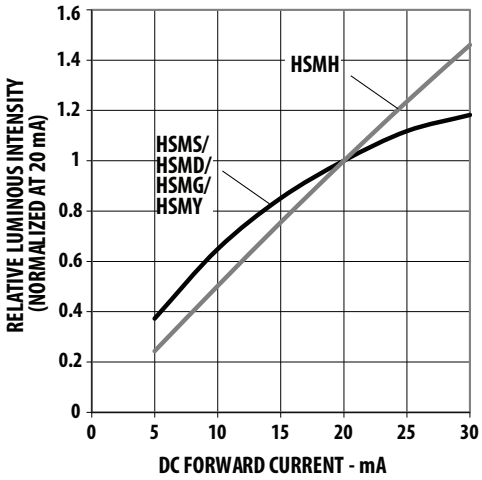

Figure 6: Maximum Forward Current vs. Ambient Temperature, Derated Based on T_JMAX = 110°C, $R\theta_{JA}$ = 500 °C/W

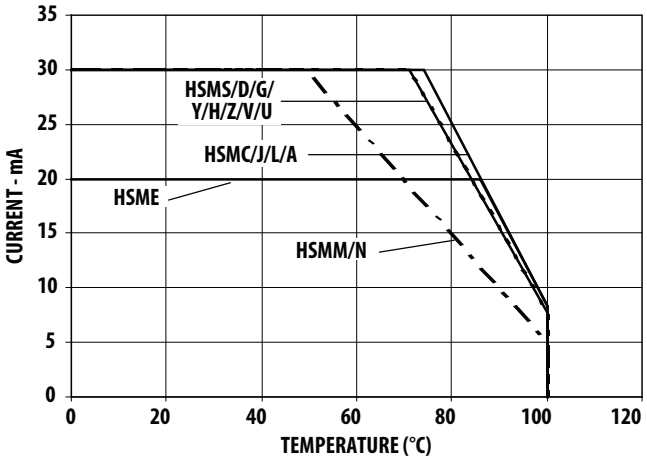

Figure 7: Maximum Forward Current vs. Solder Point Temperature, Derated Based on T_JMAX = 110°C, $R\theta_{JA}$ = 180 °C/W or 280 °C/W

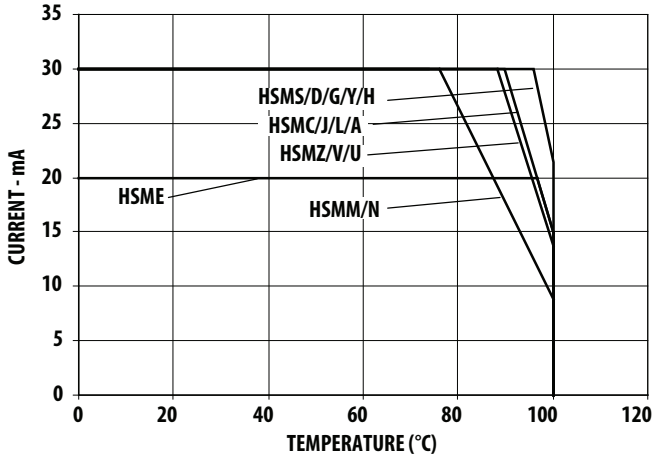

Figure 8: Dominant Wavelength vs. Forward Current (InGaN Devices)

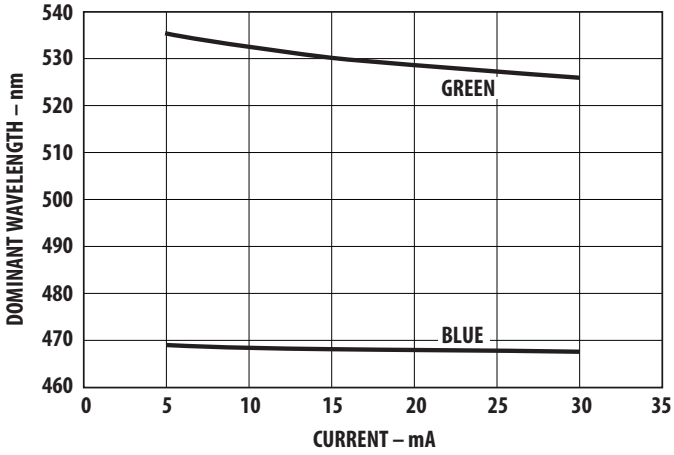

Figure 9: Forward Voltage Shift vs. Temperature

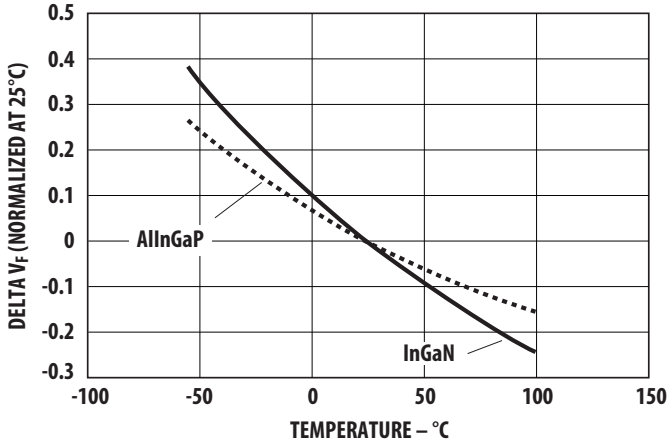

Downloaded from Arrow.com.

Figure 10: Radiation Pattern

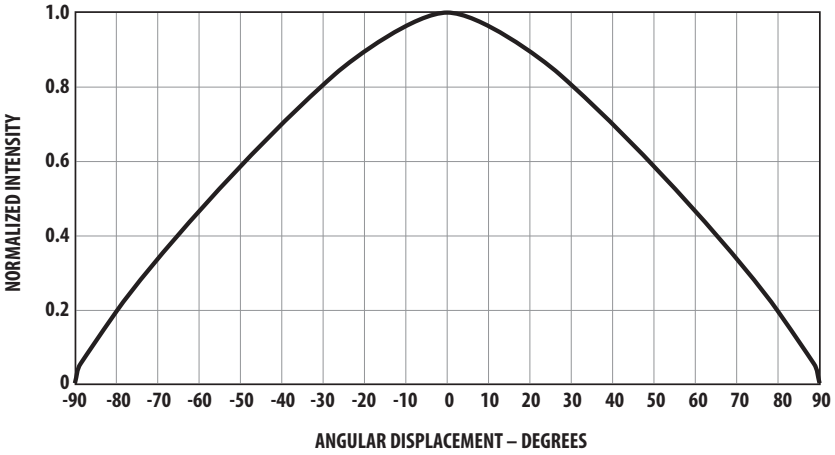

NOTE: For detailed information on reflow soldering of Broadcom surface-mount LEDs, refer to Broadcom Application Note AN 1060, *Surface Mounting SMT LED Indicator Components*.

Figure 11: Recommended Soldering Pad Pattern

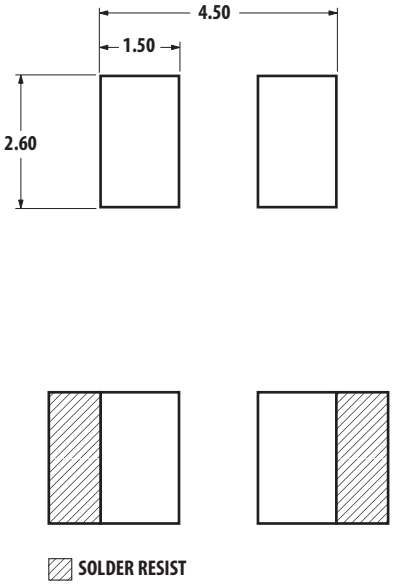

Downloaded from Arrow.com.

Figure 12: Tape Leader and Trailer Dimensions

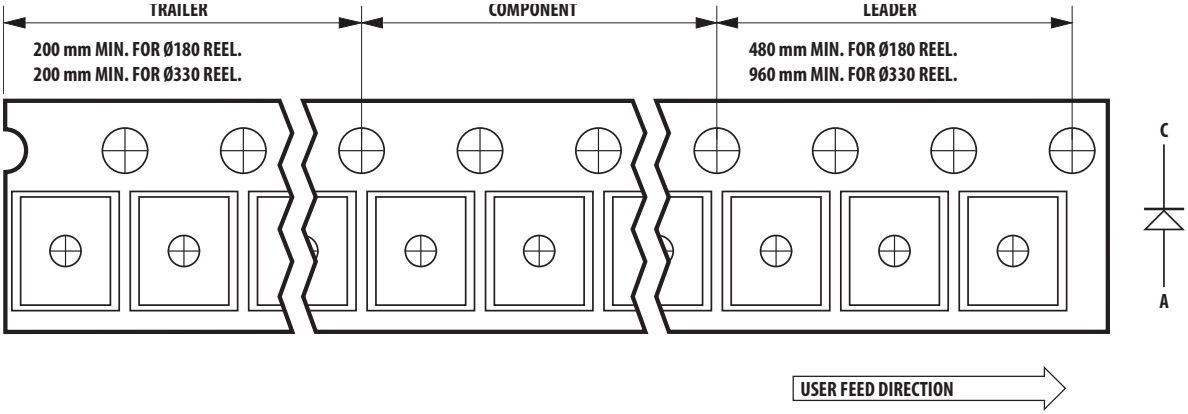

Figure 13: Tape Dimensions

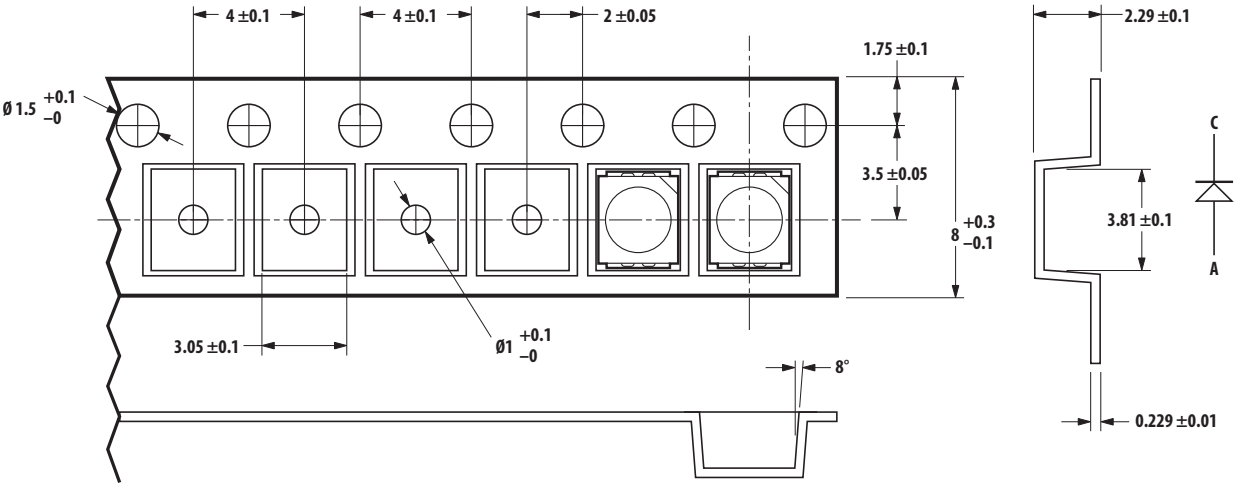

Downloaded from Arrow.com.

Figure 14: Reel Dimensions

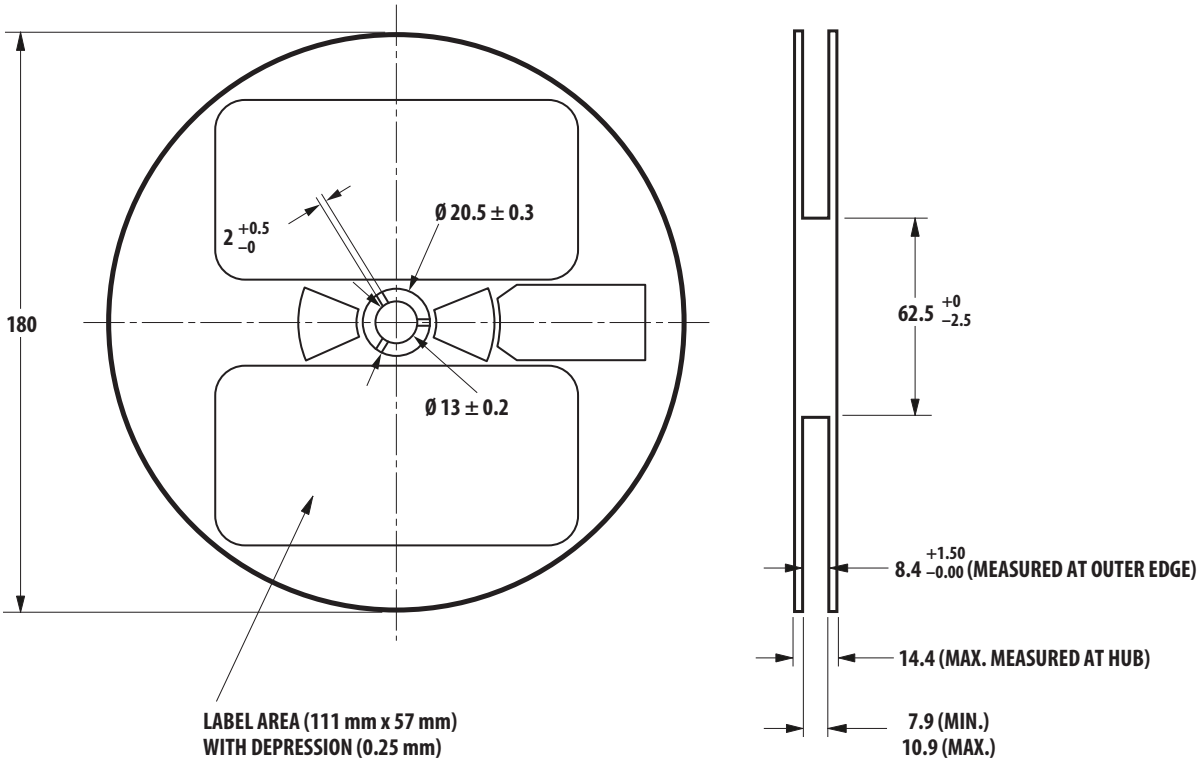

Figure 15: Reeling Orientation

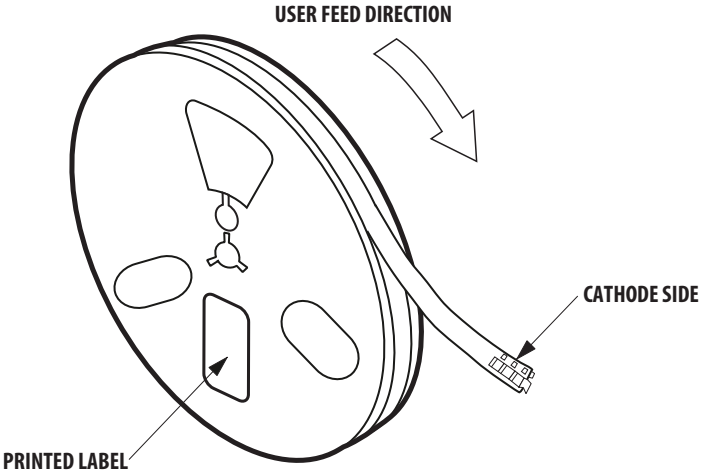

Downloaded from Arrow.com.

Precautionary Notes

Soldering

- Do not perform reflow soldering more than twice. Observe necessary precautions of handling moisture-sensitive device as stated in the following section.
- Do not apply any pressure or force on the LED during reflow and after reflow when the LED is still hot.
- Use reflow soldering to solder the LED. Use hand soldering only for rework if unavoidable, but it must be strictly controlled to following conditions:
  - Soldering iron tip temperature = 315°C maximum.
  - Soldering duration = 3 seconds maximum.
  - Number of cycles = 1 only.
  - Power of soldering iron = 50W maximum.
- Do not touch the LED package body with the soldering iron except for the soldering terminals, as it may cause damage to the LED.
- Confirm beforehand whether the functionality and performance of the LED is affected by soldering with hand soldering.

Figure 16: Recommended Pb-Free Reflow Soldering Profile

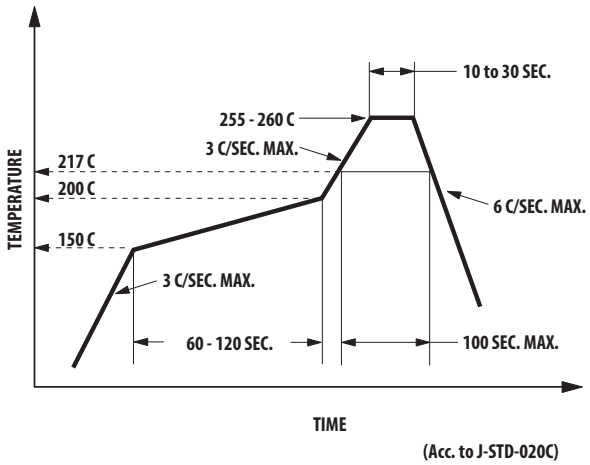

Figure 17: Recommended Board Reflow Direction

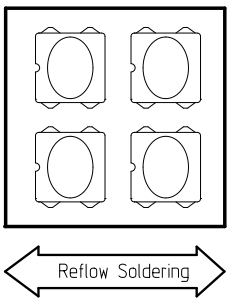

Handling Precautions

For automated pick and place, Broadcom has tested a nozzle size with OD 1.5 mm to work with this LED. However, due to the possibility of variations in other parameters such as pick and place machine maker/model, and other settings of the machine, verify that the selected nozzle will not cause damage to the LED.

Handling of Moisture-Sensitive Devices

This product has a Moisture Sensitive Level 2a rating per JEDEC J-STD-020. Refer to Broadcom Application Note AN5305, Handling of Moisture Sensitive Surface Mount Devices for additional details and a review of proper handling procedures.

- Before use:
  - An unopened moisture barrier bag (MBB) can be stored at <40°C/90% RH for 12 months. If the actual shelf life has exceeded 12 months and the Humidity Indicator Card (HIC) indicates that baking is not required, then it is safe to reflow the LEDs per the original MSL rating.
  - Do not open the MBB prior to assembly (for example, for IQC). If unavoidable, the MBB must be properly resealed with fresh desiccant and HIC. The exposed duration must be taken in as floor life.
- Control after opening the MBB:
  - Read the HIC immediately upon opening of MBB.
  - Keep the LEDs at <30°/60% RH at all times, and complete all high temperature-related processes, including soldering, curing or rework within 672 hours.
- Control for unfinished reel:

  Store unused LEDs in a sealed MBB with desiccant or a desiccator at <5% RH.
- Control of assembled boards:

  If the PCB soldered with the LEDs is to be subjected to other high-temperature processes, store the PCB in a sealed MBB with desiccant or desiccator at <5% RH to ensure that all LEDs have not exceeded their floor life of 672 hours.
- Baking is required if:
  - The HIC indicator indicates a change in color for 10% and 5%, as stated on the HIC.
  - The LEDs are exposed to conditions of >30°C/60% RH at any time.
  - The LED's floor life exceeded 672 hours.

Downloaded from Arrow.com.

The recommended baking condition is: 60±5°C for 20 hours.

Baking can only be done once.

- Storage:

  The soldering terminals of these Broadcom LEDs are silver plated. If the LEDs are exposed in ambient environment for too long, the silver plating might be oxidized, thus affecting its solderability performance. As such, keep unused LEDs in a sealed MBB with desiccant or in a desiccator at <5% RH.

Application Precautions

- The drive current of the LED must not exceed the maximum allowable limit across temperature as stated in the data sheet. Constant current driving is recommended to ensure consistent performance.
- Circuit design must cater to the whole range of forward voltage (V_F) of the LEDs to ensure the intended drive current can always be achieved.
- The LED exhibits slightly different characteristics at different drive currents, which may result in a larger variation of performance (meaning: intensity, wavelength, and forward voltage). Set the application current as close as possible to the test current to minimize these variations.
- The LED is not intended for reverse bias. Use other appropriate components for such purposes. When driving the LED in matrix form, ensure that the reverse bias voltage does not exceed the allowable limit of the LED.
- Do not use the LED in the vicinity of material with sulfur content or in environments of high gaseous sulfur compounds and corrosive elements. Examples of material that might contain sulfur are rubber gaskets, room- temperature vulcanizing (RTV) silicone rubber, rubber gloves, and so on. Prolonged exposure to such environments may affect the optical characteristics and product life.
- White LEDs must not be exposed to acidic environments and must not be used in the vicinity of any compound that may have acidic outgas, such as, but not limited to, acrylate adhesive. These environments have an adverse effect on LED performance.
- As actual application might not be exactly similar to the test conditions, do verify that the LED will not be damaged by prolonged exposure in the intended environment.
- Avoid rapid change in ambient temperature, especially in high-humidity environments, because they cause condensation on the LED.
- If the LED is intended to be used in harsh or outdoor environment, protect the LED against damages caused by rain water, water, dust, oil, corrosive gases, external mechanical stresses, and so on.

Thermal Management

The optical, electrical, and reliability characteristics of the LED are affected by temperature. Keep the junction temperature (T_J) of the LED below the allowable limit at all times. T_J can be calculated as follows:

$$T_J = T_A + R_{\theta J\text{-}A} \times I_F \times V_{Fmax}$$

where:

T_A = Ambient temperature (°C)

$R_{\theta J\text{-}A}$ = Thermal resistance from LED junction to ambient (°C/W)

I_F = Forward current (A)

V_{Fmax} = Maximum forward voltage (V)

The complication of using this formula lies in T_A and $R_{\theta J\text{-}A}$. Actual T_A is sometimes subjective and hard to determine. $R_{\theta J\text{-}A}$ varies from system to system depending on design and is usually not known.

Another way of calculating T_J is by using the solder point temperature, TS as follows:

$$T_J = T_S + R_{\theta J\text{-}S} \times I_F \times V_{Fmax}$$

where:

T_S = LED solder point temperature as shown in the following figure (°C)

$R_{\theta J\text{-}S}$ = Thermal resistance from junction to solder point (°C/W)

I_F = Forward current (A)

V_{Fmax} = Maximum forward voltage (V)

Downloaded from Arrow.com.

Figure 18: Solder Point Temperatures on PCB

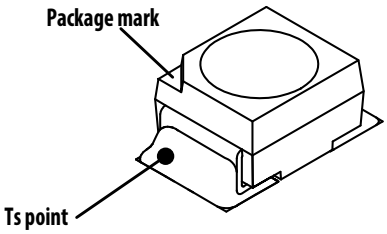

T_S can be easily measured by mounting a thermocouple on the soldering joint as shown in preceding figure, while $R_{\theta J\text{-}S}$ is provided in the data sheet. Verify the T_S of the LED in the final product to ensure that the LEDs are operating within all maximum ratings stated in the data sheet.

Eye Safety Precautions

LEDs may pose optical hazards when in operation. Do not look directly at operating LEDs because it might be harmful to the eyes. For safety reasons, use appropriate shielding or personal protective equipment.

Downloaded from Arrow.com.

Disclaimer

Broadcom products and software are not specifically designed, manufactured, or authorized for sale as parts, components, or assemblies for the planning, construction, maintenance, or direct operation of a nuclear facility or for use in medical devices or applications. The customer is solely responsible, and waives all rights to make claims against Broadcom or its suppliers, for all loss, damage, expense, or liability in connection with such use.

Copyright © 2017–2022 Broadcom. All Rights Reserved. The term “Broadcom” refers to Broadcom Inc. and/or its subsidiaries. For more information, go to www.broadcom.com. All trademarks, trade names, service marks, and logos referenced herein belong to their respective companies.

Broadcom reserves the right to make changes without further notice to any products or data herein to improve reliability, function, or design. Information furnished by Broadcom is believed to be accurate and reliable. However, Broadcom does not assume any liability arising out of the application or use of this information, nor the application or use of any product or circuit described herein, neither does it convey any license under its patent rights nor the rights of others.

BROADCOM®

Lead (Pb) Free
RoHS Compliant

Downloaded from Arrow.com.