REV	
NC	DTP04-2P-C017

REVISIONS			
SYM	DESCRIPTION	DATE	APPROVED
NC	NEW RELEASE PER E.O. P18356	10-29-03	RDR

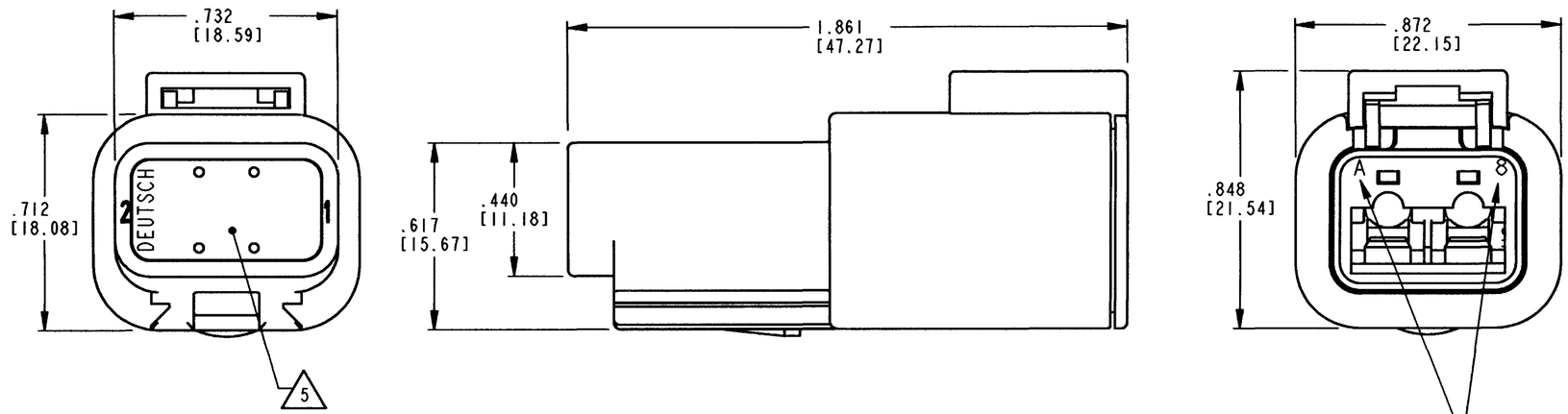

DATE CODE: MONTH IS REPRESENTED BY SEQUENTIAL ALPHA CHARACTERS. EX: A=JANUARY; YEAR IS REPRESENTED BY LAST NUMERICAL DIGIT. EX: 8=2008

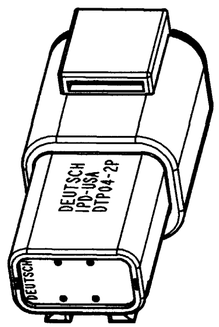

3D VIEW

5. MODIFICATION: GROMMET CONTACT CAVITIES ARE BLOCKED.

4. MATERIAL: HOUSING/SLEEVE: PLASTIC
GROMMET/SEAL: RUBBER

3. THIS RECEPTACLE MATES WITH DTP06-2S-**** PLUG. (**** = ALL MODIFICATIONS)

2. DIMENSION TOLERANCE: ±.025 [.64].

1. DIMENSIONS ARE IN INCHES [mm].

NOTES: UNLESS OTHERWISE SPECIFIED

	SIGNATURE & DATE
DR	D. MEYER 10/14/03
CHK	Madimi Tomyn 10-17-03
PE	D Meyer 10/29/03
APPD	R. Reed 10-29-03
SCALE	NONE WT

RECEPTACLE
2 CONTACTS, SIZE 12
COLOR: GREY
-C017 MOD
DTP SERIES

ENVELOPE

CP EP148 MATL. CODE

The Deutsch Company
DEUTSCH I.P.D.
3850 INDUSTRIAL AVE.
HEMET, CALIF. 92545

B DTP04-2P-C017

DWG SIZE | CODE 11139 | SHEET 1 OF 1

Downloaded from Arrow.com.