150W Ultra-High Peak Power Supply

HRP-150N3 series

User's Manual
Click Me

AS/NZS 62368.1 UL62368-1 BS EN/EN62368-1 TPTC004 IEC62368-1

Automate Industrial Network Telecom Security

Features

- Universal AC input / Full range
- Withstand 300VAC surge input for 5 seconds
- 300% peak power capability
- Built-in constant current limiting circuit
- Fanless design, Cooling by free air convection
- Protections: Short circuit / Overload / Over voltage / Over temperature
- Built-in remote sense function
- Withstand 5G vibration
- Oprating altitude up to 5000 meters(Note.5)
- Output votage adjustable ±15%(Avg.)
- 1U low profile 38mm
- 5 years warranty

Applications

- Industrial automation machinery
- Industrial control system
- Mechanical and electrical equipment
- Diagnostic or biological facilities
- Test or measurement systems
- Telecommunication equipment

GTIN CODE

MW Search: https://www.meanwell.com/serviceGTIN.aspx

Description

HRP-150N3 series is a 150W single output AC/DC ultra-high peak power supply. This series operates at 85~264VAC input voltage and offers the models with the DC output mostly demanded from the industry. Each model is cooled by free air convection, working for the temperature up to 70℃ without cover. Moreover, HRP-150N3 can provide 300% short-duration peak power for motor applications and electromechanical loads requiring much higher power during start-up.

Model Encoding

HRP - 150N3 - 24

- 24 — Output voltage(12/24/36/48V)
- N3 — 3 times peak power
- 150 — Rated wattage
- HRP — Series name

Downloaded from Arrow.com.

150W Ultra-High Peak Power Supply

HRP-150N3 series

SPECIFICATION

MODEL		HRP-150N3-12	HRP-150N3-24	HRP-150N3-36	HRP-150N3-48
OUTPUT	DC VOLTAGE	12V	24V	36V	48V
	RATED CURRENT	13A	6.5A	4.3A	3.3A
	CURRENT RANGE	0 ~ 13A	0 ~ 6.5A	0 ~ 4.3A	0 ~ 3.3A
	RATED POWER	156W	156W	154.8W	158.4W
	RIPPLE & NOISE (max.) Note.2	120mVp-p	150mVp-p	200mVp-p	240mVp-p
	VOLTAGE ADJ. RANGE	10.2 ~ 13.8V	21.6 ~ 28.8V	28.8 ~ 39.6V	40.8 ~ 55.2V
	VOLTAGE TOLERANCE Note.3	±1.5%	±1.5%	±1.5%	±1.5%
	LINE REGULATION	±0.3%	±0.2%	±0.2%	±0.2%
	LOAD REGULATION	±0.5%	±0.5%	±0.5%	±0.5%
	SETUP, RISE TIME	3000ms, 50ms/230VAC 3000ms, 50ms/115VAC at full load			
	HOLD UP TIME (Typ.)	16ms/230VAC 16ms/115VAC at full load			
INPUT	VOLTAGE RANGE Note.4	85 ~ 264VAC 120 ~ 370VDC			
	FREQUENCY RANGE	47 ~ 63Hz			
	POWER FACTOR (Typ.)	PF>0.95/230VAC PF>0.98/115VAC at full load			
	EFFICIENCY (Typ.)	88%	88%	89%	89%
	AC CURRENT (Typ.)	1.7A/115VAC 0.9A/230VAC			
	INRUSH CURRENT (Typ.)	35A/115VAC 70A/230VAC			
	LEAKAGE CURRENT	<1mA / 240VAC			
PROTECTION	OVERLOAD	Output power >105% rated for more than 5 seconds then shut down o/p voltage, re-power on to recover			
		Constant current limiting for output power >330% rated for more than 5 seconds and then shut down o/p voltage, re-power on to recover			
	OVER VOLTAGE	14.4 ~ 16.8V	30 ~ 34.8V	41.4 ~ 48.6V	57.6 ~ 67.2V
		Protection type : Shut down o/p voltage, re-power on to recover			
	OVER TEMPERATURE	Shut down o/p voltage, recovers automatically after temperature goes down			
ENVIRONMENT	WORKING TEMP.	-40 ~ +70℃ (Refer to "Derating Curve")			
	WORKING HUMIDITY	20 ~ 90% RH non-condensing			
	STORAGE TEMP., HUMIDITY	-50 ~ +85℃, 10 ~ 95% RH non-condensing			
	TEMP. COEFFICIENT	±0.04%/℃ (0 ~ 50℃)			
	VIBRATION	10 ~ 500Hz, 5G 10min./1cycle, 60min. each along X, Y, Z axes			
	OPERATING ALTITUDE Note.5	5000 meters			
SAFETY & EMC (Note 6)	SAFETY STANDARDS	UL62368-1, TUV BS EN/EN62368-1, EAC TP TC 004, AS/NZS 62368.1 approved			
	WITHSTAND VOLTAGE	I/P-O/P:3KVAC I/P-FG:2KVAC O/P-FG:0.5KVAC			
	ISOLATION RESISTANCE	I/P-O/P, I/P-FG, O/P-FG:100M Ohms / 500VDC / 25℃/ 70% RH			
	EMC EMISSION	**Parameter**	**Standard**	**Test Level / Note**	
		Conducted	BS EN/EN55032	Class B	
		Radiated	BS EN/EN55032	Class B	
		Harmonic current	BS EN/EN61000-3-2	Class A	
		Voltage Flicker	BS EN/EN61000-3-3	-----	
	EMC IMMUNITY	BS EN/EN55035 , BS EN/EN61000-6-2(BS EN/EN50082-2)			
		Parameter	**Standard**	**Test Level / Note**	
		ESD	BS EN/EN61000-4-2	Level 3, 8KV air; Level 2, 4KV contact	
		RF field	BS EN/EN61000-4-3	Level 3, 10V/m	
		EFT/ Burst	BS EN/EN61000-4-4	Level 3, 2KV	
		Surge	BS EN/EN61000-4-5	Level 4, 4KV/Line-FG; 2KV/Line-Line	
		Conducted	BS EN/EN61000-4-6	Level 3, 10V	
		Magnetic Field	BS EN/EN61000-4-8	Level 4, 30A/m	
		Voltage Dips and Interruptions	BS EN/EN61000-4-11	95% dip 0.5 periods, 30% dip 25 periods, 95% interruptions 250 periods	
OTHERS	MTBF	1706.0K hrs min. Telcordia TR/SR-332 (Bellcore) ; 222.8K hrs min. MIL-HDBK-217F (25℃)			
	DIMENSION	159*97*38mm (L*W*H)			
	PACKING	0.54Kg; 24pcs/12.96Kg/0.9CUFT			

NOTE

1. All parameters NOT specially mentioned are measured at 230VAC input, rated load and 25℃ of ambient temperature.
2. Ripple & noise are measured at 20MHz of bandwidth by using a 12" twisted pair-wire terminated with a 0.1 μF & 47 μF parallel capacitor.
3. Tolerance : includes set up tolerance, line regulation and load regulation.
4. Derating may be needed under low input voltages. Please check the derating curve for more details.
5. The ambient temperature derating of 3.5℃/1000m with fanless models and of 5℃/1000m with fan models for operating altitude higher than 2000m(6500ft).
6. The power supply is considered a component which will be installed into a final equipment. All the EMC tests are been executed by mounting the unit on a 360mm*360mm metal plate with 1mm of thickness. The final equipment must be re-confirmed that it still meets EMC directives. For guidance on how to perform these EMC tests, please refer to "EMI testing of component power supplies." (as available on https://www.meanwell.com//Upload/PDF/EMI_statement_en.pdf)

※ Product Liability Disclaimer : For detailed information, please refer to https://www.meanwell.com/serviceDisclaimer.aspx

Downloaded from Arrow.com.

Block Diagram

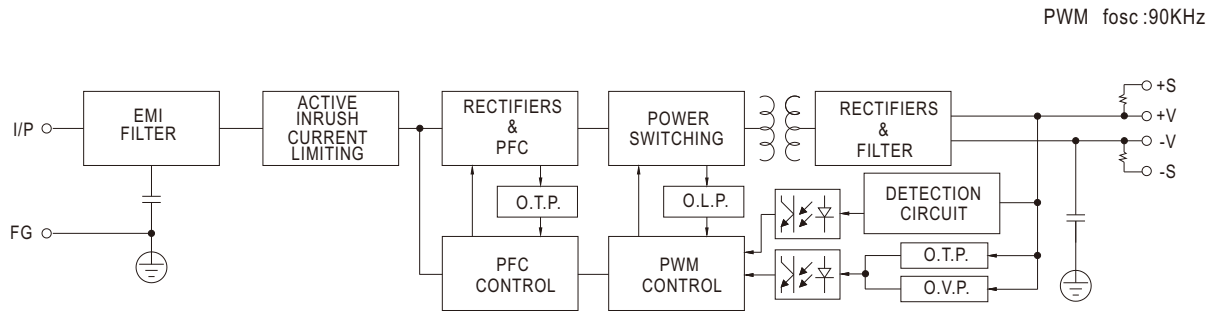

Derating Curve

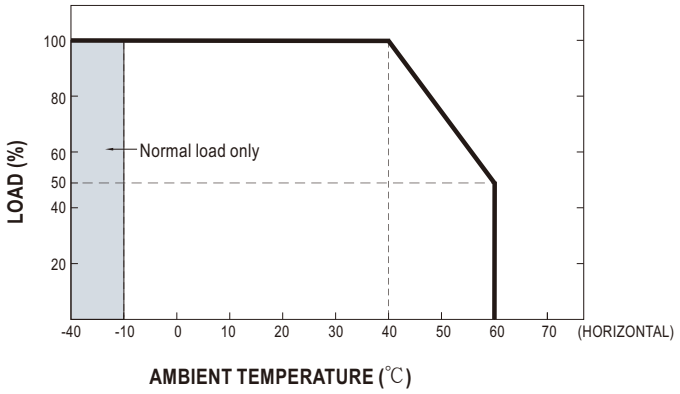

Output Derating VS Input Voltage

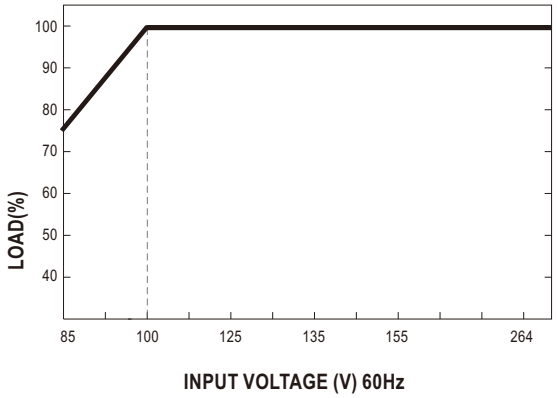

Downloaded from Arrow.com.

■ Function Manual

1.Peak Power

$$P_{av} = \frac{P_{pk} \times t + P_{npk} \times (T-t)}{T} \leqslant P_{rated}$$

$$Duty = \frac{t}{T} \times 100\% \leqslant 35\%$$

$t \leqslant 5$ sec

P_{av} : Average output power (W)

P_{pk} : Peak output power (W)

P_{npk} : Non-peak output power (W)

P_{rated} : Rated output power (W)

t : Peak power width (sec)

T: Period (sec)

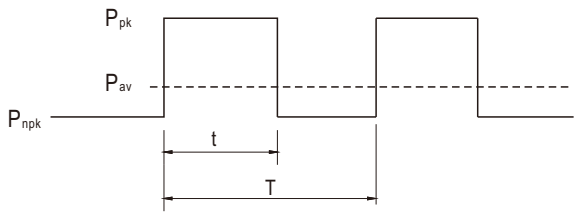

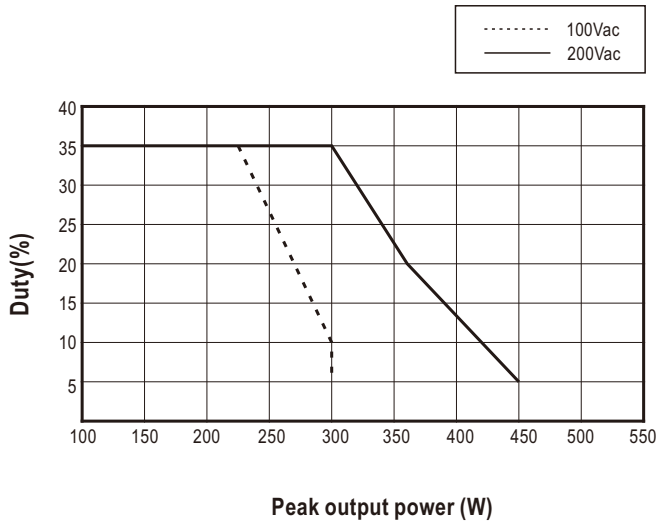

For example (12V model) :

Vin = 200V Duty_max = 5%

$P_{av} = P_{rated} = 156W$

$P_{pk} = 450W$

$t \leqslant 5$ sec

$$T \geqq \frac{5\ sec}{5\%} \geqq 100\ sec$$

$$P_{npk} \leqslant \frac{T P_{av} - t P_{pk}}{T-t}$$

$P_{npk} \leqslant 140W$

Downloaded from Arrow.com.

2.Remote Sense

The remote sensing compensates voltage drop on the load wiring up to 0.5V.

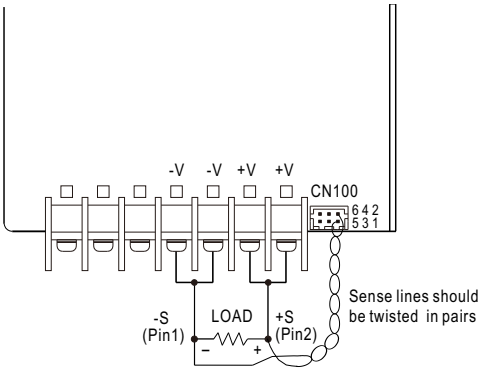

CN100

6	NC	NC	+S	2
5	NC	NC	-S	1

Fig 1.1

Downloaded from Arrow.com.

Mechanical Specification

(Unit: mm , tolerance ± 1mm)

Case No.901I

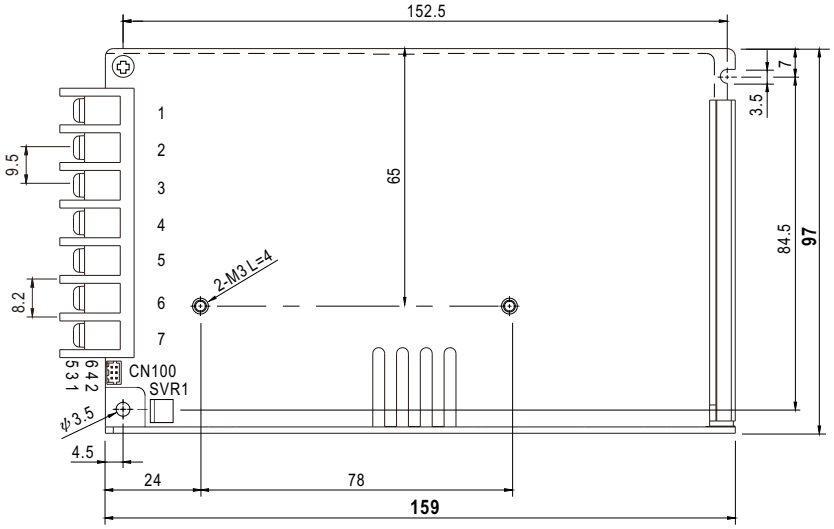

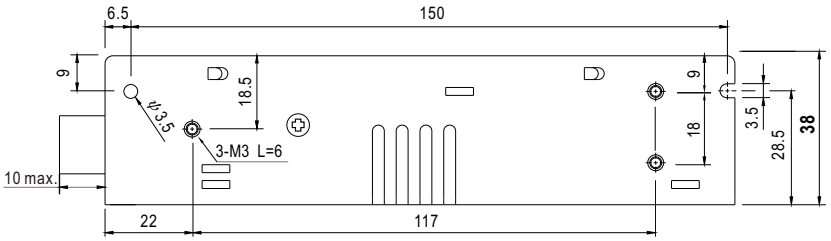

Terminal Pin No. Assignment :

Pin No.	Assignment	Pin No.	Assignment
1	AC/L	4,5	DC OUTPUT -V
2	AC/N	6,7	DC OUTPUT +V
3	FG ⏚		

Connector Pin No. Assignment (CN100) :
HRS DF11-6DP-2DSA or equivalent

Pin No.	Assignment	Mating Housing	Terminal
1	-S	HRS DF11-6DS or equivalent	HRS DF11-**SC or equivalent
2	+S		
3~6	NC		

Installation Manual

Please refer to : http://www.meanwell.com/manual.html

Downloaded from Arrow.com.