Data sheet

HDC 32B TOLU 1PG29G

Weidmüller Interface GmbH & Co. KG
Klingenbergstraße 26
D-32758 Detmold
Germany

www.weidmueller.com



The special die-cast alloy and the multi-layered surface sealing provide complete protection for the HDC housings.
The cleverly designed interlock system is manufactured from stainless steel. This guarantees a long lifespan with high resistance to corrosion and impact.
The housing interlock system provides integrated safety. Our unique, patented spring system provides the housing interlock with a secure grip and prevents accidental opening.
The laser marking allows for easy and quick identification. Each housing is permanently labelled with a laser marking so that each product can be quickly designated and positioned.
Weidmüller RockStar® IP 65 / NEMA Type 4X housings - your first choice for industrial housings with IP 65 protection.

General ordering data

Version	HDC enclosures, Installation size: 10, Protection degree: IP65, in plugged condition, Cable entry from top, Plug housing, End-locking clamp, lower side, Standard, Size of cable entries: PG 29
Order No.	1219300000
Type	HDC 32B TOLU 1PG29G
GTIN (EAN)	4008190164652
Qty.	1 items

Downloaded from Arrow.com.

Data sheet

HDC 32B TOLU 1PG29G

Weidmüller Interface GmbH & Co. KG
Klingenbergstraße 26
D-32758 Detmold
Germany

www.weidmueller.com

Technical data

Approvals

Approvals	
ROHS	Conform
UL File Number Search	UL Website
Certificate No. (cURus)	E92202

Dimensions and weights

Depth	108.5 mm	Depth (inches)	4.2716 inch
Height	79 mm	Height (inches)	3.1102 inch
Width	82.5 mm	Width (inches)	3.248 inch
Net weight	382 g		

Temperatures

Limit temperature	-40 °C ... 125 °C

Environmental Product Compliance

RoHS Compliance Status	Compliant without exemption	
REACH SVHC	No SVHC above 0.1 wt%	
Chemical resistance	Substance	Acetone
	Chemical resistance	Conditionally resistant
	Substance	Drilling oil
	Chemical resistance	Resistant
	Substance	Diesel
	Chemical resistance	Resistant
	Substance	Ethyl alcohol
	Chemical resistance	Resistant
	Substance	Transmission oil
	Chemical resistance	Resistant
	Substance	Hydraulic oil
	Chemical resistance	Resistant
	Substance	Coolant
	Chemical resistance	Resistant
	Substance	Petroleum benzine
	Chemical resistance	Resistant
	Substance	Sweat
	Chemical resistance	Resistant
	Substance	Premium gasoline
	Chemical resistance	Conditionally resistant
	Substance	Water
	Chemical resistance	Resistant
	Substance	UV
	Chemical resistance	Unstable
	Substance	Ozone
	Chemical resistance	Unstable

Dimensions

Cable entry	w. thread	Width housing C	82.5 mm
Total length housing	94 mm	Height of housing B	79 mm

Downloaded from Arrow.com.

Data sheet

HDC 32B TOLU 1PG29G

Weidmüller Interface GmbH & Co. KG
Klingenbergstraße 26
D-32758 Detmold
Germany

www.weidmueller.com

Technical data

General data

Surface finish	Powder coating	Protection degree	IP65, in plugged condition

Version

Number of cable glands	0	Size of cable entries	PG 29
Top part/bottom part/lid	upper part	Cover	without cover
Tightening torque	2 Nm	Number of cable entry on top	1
Number of cable entry sideways	0	Design of housing	Cable entry from top, Plug housing
Design of locking system	End-locking clamp, lower side	Design	Standard
Installation size	10	Cable entry	w. thread
Type	Plug	Clamp version	End-locking clamp
Sealing	no sealing	Internal thread	PG 29
Colour (RAL)	RAL 7035	BG	10
Suitable for ModuPlug®	Yes		

Classifications

ETIM 8.0	EC000437	ETIM 9.0	EC000437
ETIM 10.0	EC000437	ECLASS 14.0	27-44-02-02
ECLASS 15.0	27-44-02-02		

Downloaded from Arrow.com.

HDC 32B TOLU 1PG29G

Weidmüller Interface GmbH & Co. KG
Klingenbergstraße 26
D-32758 Detmold
Germany

www.weidmueller.com

Drawings

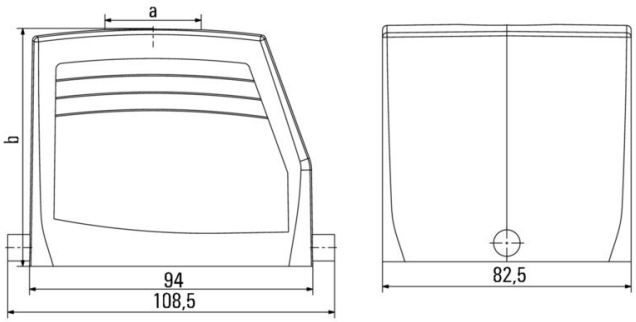

Downloaded from Arrow.com.

HDC 32B TOLU 1PG29G

Weidmüller Interface GmbH & Co. KG
Klingenbergstraße 26
D-32758 Detmold
Germany

www.weidmueller.com

Accessories

Base housing



The special die-cast alloy and the multi-layered surface sealing provide complete protection for the HDC housings.
The cleverly designed interlock system is manufactured from stainless steel. This guarantees a long lifespan with high resistance to corrosion and impact.
The housing interlock system provides integrated safety. Our unique, patented spring system provides the housing interlock with a secure grip and prevents accidental opening.
The laser marking allows for easy and quick identification. Each housing is permanently labelled with a laser marking so that each product can be quickly designated and positioned.
Weidmüller RockStar® IP 65 / NEMA Type 4X housings - your first choice for industrial housings with IP 65 protection.

General ordering data

Type	HDC 32B SLU 2M32G	Version
Order No.	1788470000	HDC enclosures, Installation size: 10, Protection degree: IP65, in
GTIN (EAN)	4032248206001	plugged condition, Base housing, End-locking clamp, lower side,
Qty.	1 ST	Standard, Size of cable entries: M 32
Type	HDC 32B SDLU 2M32G	Version
Order No.	1788490000	HDC enclosures, Installation size: 10, Protection degree: IP65, in
GTIN (EAN)	4032248206025	plugged condition, Base housing, End-locking clamp, lower side,
Qty.	1 ST	Standard, with cover, Size of cable entries: M 32
Type	HDC 32B SDLU 1M32G	Version
Order No.	1902650000	HDC enclosures, Installation size: 10, Protection degree: IP65, in
GTIN (EAN)	4032248585656	plugged condition, Base housing, End-locking clamp, lower side,
Qty.	1 ST	Standard, with cover, Size of cable entries: M 32
Type	HDC 32B SLU 1M32G	Version
Order No.	1902670000	HDC enclosures, Installation size: 10, Protection degree: IP65, in
GTIN (EAN)	4032248585663	plugged condition, Base housing, End-locking clamp, lower side,
Qty.	1 ST	Standard, Size of cable entries: M 32

Downloaded from Arrow.com.

HDC 32B TOLU 1PG29G

Weidmüller Interface GmbH & Co. KG
Klingenbergstraße 26
D-32758 Detmold
Germany

www.weidmueller.com

Accessories

Bulkhead housing



The special die-cast alloy and the multi-layered surface sealing provide complete protection for the HDC housings.
The cleverly designed interlock system is manufactured from stainless steel. This guarantees a long lifespan with high resistance to corrosion and impact.
The housing interlock system provides integrated safety. Our unique, patented spring system provides the housing interlock with a secure grip and prevents accidental opening.
The laser marking allows for easy and quick identification. Each housing is permanently labelled with a laser marking so that each product can be quickly designated and positioned.
Weidmüller RockStar® IP 65 / NEMA Type 4X housings - your first choice for industrial housings with IP 65 protection.

General ordering data

Type	HDC 32B ALU	Version
Order No.	1219500000	HDC enclosures, Installation size: 10, Protection degree: IP65, in
GTIN (EAN)	4008190011826	plugged condition, Bulkhead housing, End-locking clamp, lower side,
Qty.	1 ST	Standard
Type	HDC 32B ADLU	Version
Order No.	1219800000	HDC enclosures, Installation size: 10, Protection degree: IP65, in
GTIN (EAN)	4008190111090	plugged condition, Bulkhead housing, End-locking clamp, lower side,
Qty.	1 ST	Standard, with cover

Coupling hood



The special die-cast alloy and the multi-layered surface sealing provide complete protection for the HDC housings.
The cleverly designed interlock system is manufactured from stainless steel. This guarantees a long lifespan with high resistance to corrosion and impact.
The housing interlock system provides integrated safety. Our unique, patented spring system provides the housing interlock with a secure grip and prevents accidental opening.
The laser marking allows for easy and quick identification. Each housing is permanently labelled with a laser marking so that each product can be quickly designated and positioned.
Weidmüller RockStar® IP 65 / NEMA Type 4X housings - your first choice for industrial housings with IP 65 protection.

General ordering data

Type	HDC 32B KLU 1M32G	Version
Order No.	1788500000	HDC enclosures, Installation size: 10, Protection degree: IP65, in
GTIN (EAN)	4032248206032	plugged condition, Coupling housing, End-locking clamp, lower side,
Qty.	1 ST	Standard, Size of cable entries: M 32

Downloaded from Arrow.com.