MICRO SWITCH
a Honeywell Division
FED. MFG. CODE 91929

ACTUATOR-SWITCH

CATALOG LISTING
AD5721R
ARMY-NAVY PART NO. AN3169-1

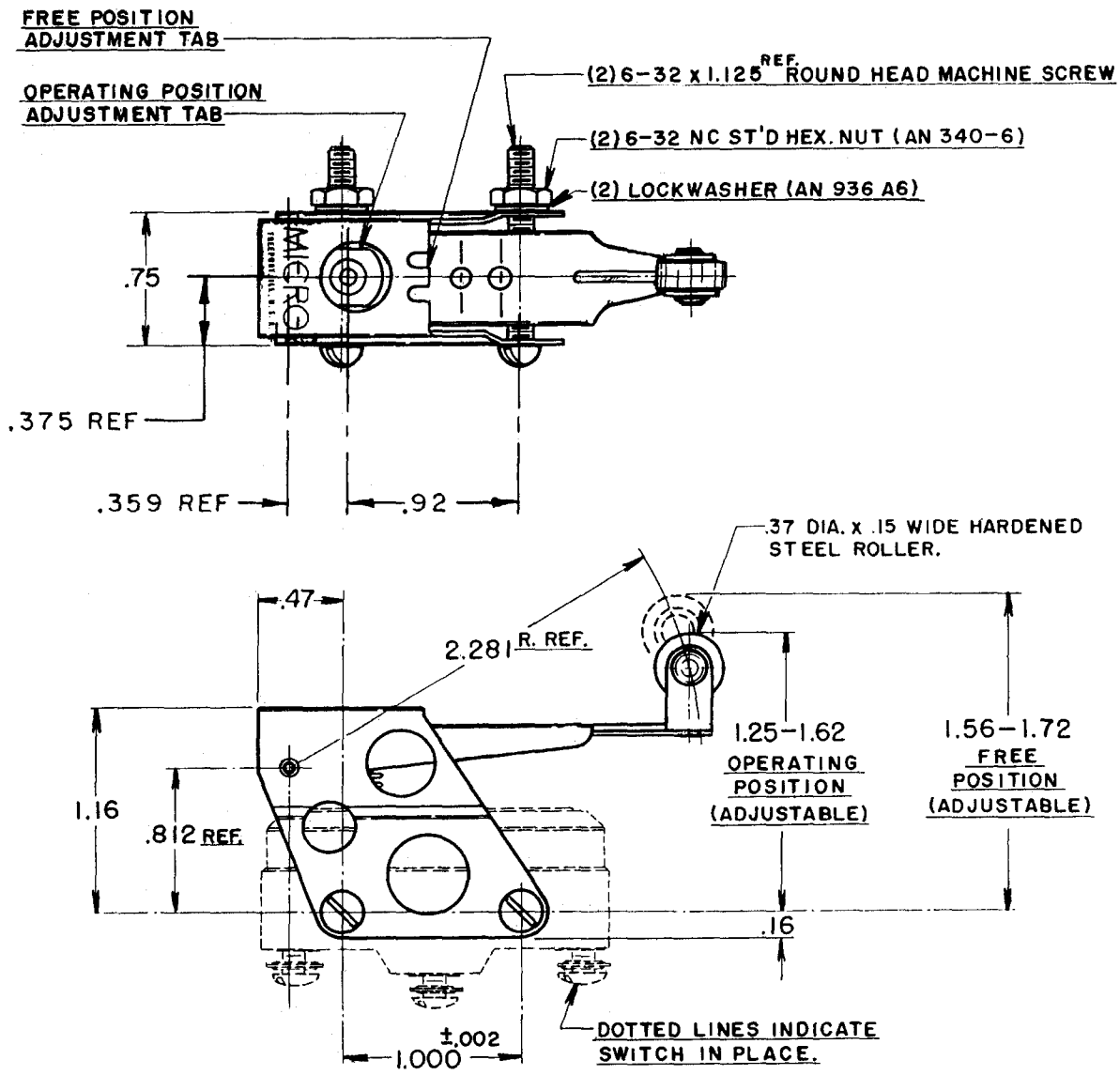

NOTE-
1-SCREWS, NUTS, AND LOCKWASHERS FURNISHED UNASSEMBLED.

THIS DRAWING COVERS A PROPRIETARY ITEM AND IS THE PROPERTY OF MICRO SWITCH, A DIVISION OF HONEYWELL. THIS DRAWING IS NOT TO BE COPIED OR USED WITHOUT THE APPROVAL OF MICRO SWITCH.

THIRD ANGLE PROJECTION

CHARACTERISTICS	ELECTRICAL DATA		SCALE FULL	DO NOT SCALE PRINT
OVERTRAVEL — — — — — .438 APPROX.	CONTACT ARANGEMENT	BREAK DISTANCE	UNLESS OTHERWISE SPECIFIED TOLERANCES ARE	
			ONE PLACE (.0)	±.030
			TWO PLACE (.00)	±.015
			THREE PLACE (.000)	±.005
			ANGLES	±
			WEIGHT	

(M) AD5721R ISSUE 10 REPLACES
AD5721R CATALOG LISTING
PAGE 1 OF 1
RELEASE NO.
ISSUE 18 M
CHECK

REVISIONS

A	CO-82955	GJW 29 APR 96

CHECK
CHECK
CHECK
DRAWN GJW 29 APR96
FORMTEK

Downloaded from Arrow.com.