Overview

The KEMET T409 is approved to MIL-PRF-55365/4 (CWR09 Style) with Weibull failure rates of B level (0.1% failures per 1,000 hours), C level (0.01% failures per 1,000 hours), D level (0.001% failures per 1,000 hours), or T level (0.01% failures per 1,000 hours, option C surge current, DPA, radiographic inspection, 100% visual inspection, DCL and ESR measurements within +3 standard deviations, and Group C inspection). This CWR09 product is a precision-molded device, with compliant terminations and indelible laser marking. Tape & Reel packaging per EIA 481 are standard.

Benefits

- Established reliability options
- Tape & Reel standard packaging per EIA 481
- Symmetrical, compliant terminations
- Laser-marked case
- 100% surge current test available on all case sizes
- Qualified to MIL-PRF-55365/4 (CWR09 Style)
- Termination options B, C, H, and K
- Weibull failure options B, C, D, and T
- Exponential failure rates M, P, R, and S

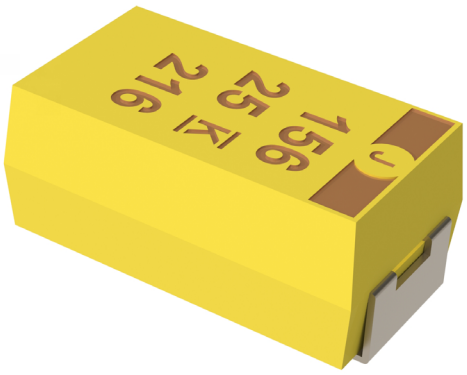

Applications

Typical applications include decoupling and filtering in military and aerospace applications requiring CWR09 devices.

Environmental Compliance

- Halogen-free
- Epoxy compliant with UL94 V-0
- Molded Epoxy complies for outgassing testing under ASTM E 595.

K-SIM

For a detailed analysis of specific part numbers, please visit ksim3.kemet.com to access KEMET's K-SIM software. KEMET K-SIM is designed to simulate behavior of components with respect to frequency, ambient temperature, and DC bias levels.

Downloaded from Arrow.com.

KEMET Ordering Information

T	409	A	225	K	004	A	H	4252	7280
Capacitor Class	Series	Case Size	Capacitance Code (pF)	Capacitance Tolerance	Rated Voltage (VDC)	Failure Rate/Design	Termination Finish	Added Surge Current Options	Packaging (C-Spec)
T = Tantalum	CWR 09 Established reliability	A B C D E F G H	First two digits represent significant figures. Third digit specifies number of zeros.	J = ±5% K = ±10% M = ±20%	004 = 4 006 = 6 010 = 10 015 = 15 020 = 20 025 = 25 035 = 35 050 = 50	Weibull A = Non-ER B = (0.1%/1,000 hours) C = (0.01%/1,000 hours) D = (0.001%/1,000 hours) T = T Level* (0.01%/1,000 hours) Exponential M = (1.0%/1,000 hours) P = (0.1%/1,000 hours) R = (0.01%/1,000 hours) S = (0.001%/1,000 hours)	C = Hot solder dipped H = Standard solder-coated (SnPb 5% Pb minimum) B = Gold-plated K = Solder-fused	4250 = 10 cycles, 25°C±5°C, after Weibull 4251 = 10 cycles, -55°C±5°C and 85°C±5°C, after Weibull 4252 = 10 cycles, -55°C±5°C and 85°C±5°C, before Weibull TLVL = 10 cycles, -55°C±5°C and 85°C±5°C, before Weibull, weibull grade level "T"	Blank = 7" Reel 7280 = 13" Reel 7611 = Bulk bag 7640 = Bulk plastic box WAFL = Waffle pack

Ordering Information – Defense MIL-PRF-55365/4

CWR09	J	H	105	K	C	A
Capacitor Style	Rated Voltage (VDC)	Termination Finish	Capacitance Code (pF)	Capacitance Tolerance	Reliability Level	Surge Current Option** (10 cylces)
Per MIL-PRF-55365/4	C = 4 D = 6 F = 10 H = 15 J = 20 K = 25 M = 35 N = 50	B = Gold-plated C = Hot solder dipped H = Solder-plated K = Solder fused	First two digits represent significant figures. Third digit specifies number of zeros.	J = ±5% K = ±10% M = ±20%	Weibull A = non-ER B = (0.1%/1,000 hours) C = (0.01%/1,000 hours) D = (0.001%/1,000 hours) T = T Level* (0.01%/1,000 hours) Exponential M = (1.0%/1,000 hours) P = (0.1%/1,000 hours) R = (0.01%/1,000 hours) S = (0.001%/1,000 hours)	A = +25°C after Weibull B = −55°C +85°C after Weibull C = −55°C +85°C before Weibull Blank = No surge

** When T Level is ordered, Surge Current option C must be selected.*
*** For additional surge current details, please refer to MIL-PRF-55665*

Downloaded from Arrow.com.

Performance Characteristics

Item	Performance Characteristics
Operating Temperature	−55°C to 125°C
Rated Capacitance Range	0.1 – 100 µF at 120 Hz/25°C
Capacitance Tolerance	J Tolerance (5%), K Tolerance (10%), M Tolerance (20%)
Rated Voltage Range	4 – 50 V
DF (120 Hz)	Refer to Part Number Electrical Specification Table
ESR (100 kHz)	Refer to Part Number Electrical Specification Table
Leakage Current	≤ 0.01 CV (µA) at rated voltage after 5 minutes

Qualification

Test	Condition		Characteristics			
Endurance	85°C at rated voltage, 2,000 hours 125°C at 2/3 rated voltage, 2,000 hours		Δ C/C	Within ±10% of initial value		
			DF	Within initial limits		
			DCL	Within 1.25 x initial limit		
			ESR	Within initial limits		
Storage Life	125°C at 0 volts, 2,000 hours		Δ C/C	Within ±10% of initial value		
			DF	Within initial limits		
			DCL	Within 1.25 x initial limit		
			ESR	Within initial limits		
Thermal Shock	MIL-STD-202, Method 107, condition B, mounted, −55C° to 125°C, 1,000 cycles		Δ C/C	Within ±5% of initial value		
			DF	Within initial limits		
			DCL	Within 1.25 x initial limit		
			ESR	Within initial limits		
Temperature Stability	Extreme temperature exposure at a succession of continuous steps at +25°C, −55°C, +25°C, +85°C, +125°C, +25°C		+25°C	−55°C	+85°C	+125°C
		Δ C/C	IL*	±10%	±10%	±15%
		DF	IL	IL	1.5 x IL	1.5 x IL
		DCL	IL	N/A	10 x IL	12 x IL
Surge Voltage	25°C and 85°C, 1.32 x rated voltage 1,000 cycles (125°C, 1.2 x rated voltage)		Δ C/C	Within ±5% of initial value		
			DF	Within initial limits		
			DCL	Within initial limits		
			ESR	Within initial limits		
Mechanical Shock/ Vibration	MIL-STD-202, Method 213, Condition I, 100 G peak MIL-STD-202, Method 204, Condition D, 10 Hz to 2,000 Hz, 20 G peak		Δ C/C	Within ±10% of initial value		
			DF	Within initial limits		
			DCL	Within initial limits		
Additional qualification tests per MIL-PRF-55365/4	Please contact KEMET for more information.					

**IL = Initial limit*

Downloaded from Arrow.com.

Certification

MIL-PRF-55365/4

Electrical Characteristics

ESR vs. Frequency

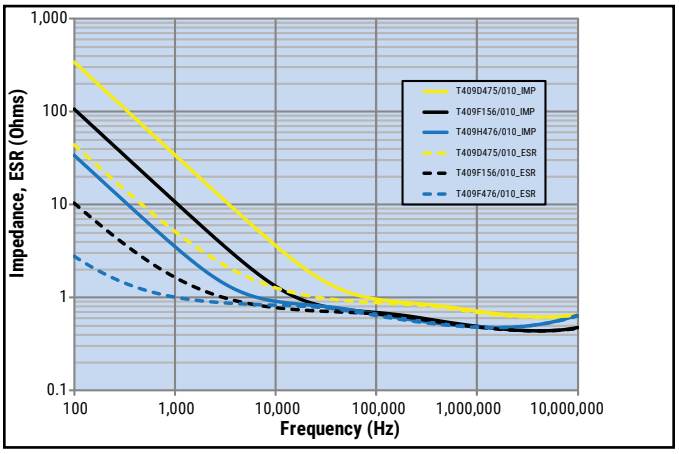

Capacitance vs. Frequency

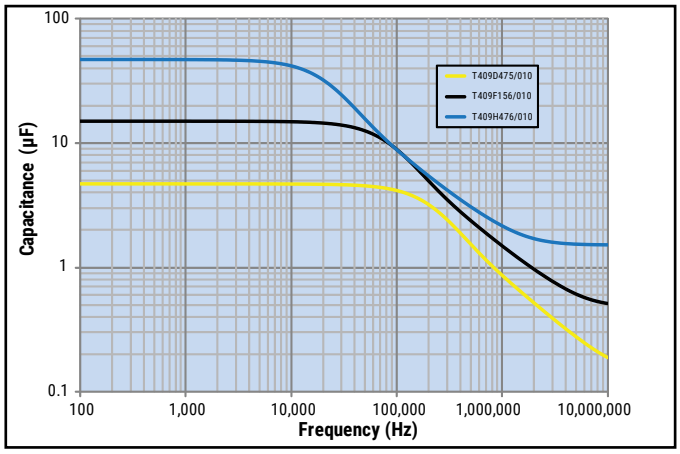

Downloaded from Arrow.com.

Dimensions – Millimeters (Inches)

Metric will govern

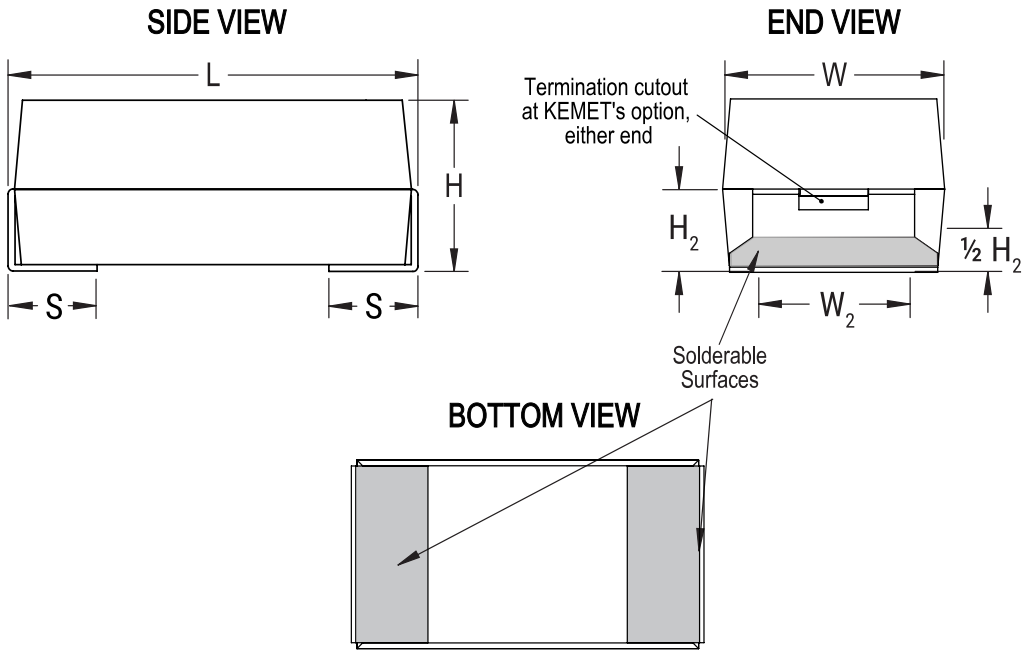

Case Size	Component						Typical Weight
KEMET	L ±0.38 (0.015)	W ±0.38 (0.015)	H ±0.38 (0.015)	P +0.25 (0.010), −0.13 (0.005)	W_2	H_2 Minimum	(mg)
A	2.54 (0.100)	1.27 (0.050)	1.27 (0.050)	0.76 (0.030)	1.27 ±0.13 (0.050 ±0.005)	0.76 (0.030)	39.91
B	3.81 (0.150)	1.27 (0.050)	1.27 (0.050)	0.76 (0.030)	1.27 ±0.13 (0.050 ±0.005)	0.76 (0.030)	68.73
C	5.08 (0.200)	1.27 (0.050)	1.27 (0.050)	0.76 (0.030)	1.27 ±0.13 (0.050 ±0.005)	0.76 (0.030)	146.5
D	3.81 (0.150)	2.54 (0.100)	1.27 (0.050)	0.76 (0.030)	2.41 +0.13,−0.25 (0.095 +0.005,−0.010)	0.76 (0.030)	264.12
E	5.08 (0.200)	2.54 (0.100)	1.27 (0.050)	0.76 (0.030)	2.41 +0.13,−0.25 (0.095 +0.005,−0.010)	0.76 (0.030)	421.63
F	5.59 (0.220)	3.43 (0.135)	1.78 (0.070)	0.76 (0.030)	3.30 ±0.13 (0.130 ±0.005)	1.02 (0.040)	173.63
G	6.73 (0.265)	2.79 (0.110)	2.79 (0.110)	1.27 (0.050)	2.67 ±0.13 (0.105 ±0.005)	1.52 (0.060)	266.42
H	7.24 (0.285)	3.81 (0.150)	2.79 (0.110)	1.27 (0.050)	3.68 +0.013,−0.51 (0.145 +0.005,−0.020)	1.52 (0.060)	349.01

Note: When option C is selected for lead material, add an additional 0.38 mm (0.015 inch) to the above tolerances for "L", "W", "H", "P", "W_2," and "H_2."
These weights are provided as reference. If exact weights are needed, please contact your KEMET sales representative.

Downloaded from Arrow.com.

Table 1 – Ratings & Part Number Reference

Rated Voltage	Rated Cap	Case Code/ Case Size	KEMET Part Number	MIL-PRF-55365/4 Part Number	DC Leakage	DF	ESR	Maximum Allowable Ripple Current (rms)	Maximum Operating Temp	MSL
VDC @ 85°C	µF	KEMET/EIA	(See below for part options)	(See below for part options)	µA at +25°C Maximum/5 Minutes	% at +25°C 120 Hz Maximum	Ω at +25°C 100 kHz Maximum	mA at +25°C 100 kHz	°C	Reflow Temp ≤ 260°C
4	2.2	A/1005	T409A225(1)004(2)(3)(4)	CWR09C(3)225(1)(2)(5)	1	6.0	8.0	79	125	1
4	4.7	B/1505	T409B475(1)004(2)(3)(4)	CWR09C(3)475(1)(2)(5)	1.0	6.0	8.0	94	125	1
4	6.8	C/2005	T409C685(1)004(2)(3)(4)	CWR09C(3)685(1)(2)(5)	1.0	6.0	5.5	117	125	1
4	10	D/1510	T409D106(1)004(2)(3)(4)	CWR09C(3)106(1)(2)(5)	1.0	8.0	4.0	141	125	1
4	15	E/2010	T409E156(1)004(2)(3)(4)	CWR09C(3)156(1)(2)(5)	1.0	8.0	3.5	160	125	1
4	33	F/2214	T409F336(1)004(2)(3)(4)	CWR09C(3)336(1)(2)(5)	2.0	8.0	2.2	213	125	1
4	68	G/2711	T409G686(1)004(2)(3)(4)	CWR09C(3)686(1)(2)(5)	3.0	10.0	1.1	337	125	1
4	100	H/2915	T409H107(1)004(2)(3)(4)	CWR09C(3)107(1)(2)(5)	4.0	10.0	0.9	408	125	1
6	1.5	A/1005	T409A155(1)006(2)(3)(4)	CWR09D(3)155(1)(2)(5)	1.0	6.0	8.0	79	125	1
6	3.3	B/1505	T409B335(1)006(2)(3)(4)	CWR09D(3)335(1)(2)(5)	1.0	6.0	8.0	94	125	1
6	4.7	C/2005	T409C475(1)006(2)(3)(4)	CWR09D(3)475(1)(2)(5)	1.0	6.0	5.5	117	125	1
6	6.8	D/1510	T409D685(1)006(2)(3)(4)	CWR09D(3)685(1)(2)(5)	1.0	6.0	4.5	133	125	1
6	10	E/2010	T409E106(1)006(2)(3)(4)	CWR09D(3)106(1)(2)(5)	1.0	8.0	3.5	160	125	1
6	22	F/2214	T409F226(1)006(2)(3)(4)	CWR09D(3)226(1)(2)(5)	2.0	8.0	2.2	213	125	1
6	47	G/2711	T409G476(1)006(2)(3)(4)	CWR09D(3)476(1)(2)(5)	3.0	10.0	1.1	337	125	1
6	68	H/2915	T409H686(1)006(2)(3)(4)	CWR09D(3)686(1)(2)(5)	4.0	10.0	0.9	408	125	1
10	1	A/1005	T409A105(1)010(2)(3)(4)	CWR09F(3)105(1)(2)(5)	1.0	6.0	10.0	71	125	1
10	2.2	B/1505	T409B225(1)010(2)(3)(4)	CWR09F(3)225(1)(2)(5)	1.0	6.0	8.0	94	125	1
10	3.3	C/2005	T409C335(1)010(2)(3)(4)	CWR09F(3)335(1)(2)(5)	1.0	6.0	5.5	117	125	1
10	4.7	D/1510	T409D475(1)010(2)(3)(4)	CWR09F(3)475(1)(2)(5)	1.0	6.0	4.5	133	125	1
10	6.8	E/2010	T409E685(1)010(2)(3)(4)	CWR09F(3)685(1)(2)(5)	1.0	6.0	3.5	160	125	1
10	15	F/2214	T409F156(1)010(2)(3)(4)	CWR09F(3)156(1)(2)(5)	2.0	8.0	2.5	200	125	1
10	33	G/2711	T409G336(1)010(2)(3)(4)	CWR09F(3)336(1)(2)(5)	3.0	10.0	1.1	337	125	1
10	47	H/2915	T409H476(1)010(2)(3)(4)	CWR09F(3)476(1)(2)(5)	5.0	10.0	0.9	408	125	1
15	0.68	A/1005	T409A684(1)015(2)(3)(4)	CWR09H(3)684(1)(2)(5)	1.0	6.0	12.0	65	125	1
15	1.5	B/1505	T409B155(1)015(2)(3)(4)	CWR09H(3)155(1)(2)(5)	1.0	6.0	8.0	94	125	1
15	2.2	C/2005	T409C225(1)015(2)(3)(4)	CWR09H(3)225(1)(2)(5)	1.0	6.0	5.5	117	125	1
15	3.3	D/1510	T409D335(1)015(2)(3)(4)	CWR09H(3)335(1)(2)(5)	1.0	6.0	5.0	126	125	1
15	4.7	E/2010	T409E475(1)015(2)(3)(4)	CWR09H(3)475(1)(2)(5)	1.0	6.0	4.0	150	125	1
15	10	F/2214	T409F106(1)015(2)(3)(4)	CWR09H(3)106(1)(2)(5)	2.0	6.0	2.5	200	125	1
15	22	G/2711	T409G226(1)015(2)(3)(4)	CWR09H(3)226(1)(2)(5)	4.0	6.0	1.1	337	125	1
15	33	H/2915	T409H336(1)015(2)(3)(4)	CWR09H(3)336(1)(2)(5)	5.0	8.0	0.9	408	125	1
20	0.47	A/1005	T409A474(1)020(2)(3)(4)	CWR09J(3)474(1)(2)(5)	1.0	8.0	14.0	60	125	1
20	0.68	B/1505	T409B684(1)020(2)(3)(4)	CWR09J(3)684(1)(2)(5)	1.0	6.0	10.0	84	125	1
20	1	B/1505	T409B105(1)020(2)(3)(4)	CWR09J(3)105(1)(2)(5)	1.0	6.0	12.0	76	125	1
20	1.5	C/2005	T409C155(1)020(2)(3)(4)	CWR09J(3)155(1)(2)(5)	1.0	6.0	6.0	112	125	1
20	2.2	D/1510	T409D225(1)020(2)(3)(4)	CWR09J(3)225(1)(2)(5)	1.0	6.0	5.0	126	125	1
20	3.3	E/2010	T409E335(1)020(2)(3)(4)	CWR09J(3)335(1)(2)(5)	1.0	6.0	4.0	150	125	1
20	6.8	F/2214	T409F685(1)020(2)(3)(4)	CWR09J(3)685(1)(2)(5)	2.0	6.0	2.4	204	125	1
20	15	G/2711	T409G156(1)020(2)(3)(4)	CWR09J(3)156(1)(2)(5)	3.0	6.0	1.1	337	125	1
20	22	H/2915	T409H226(1)020(2)(3)(4)	CWR09J(3)226(1)(2)(5)	4.0	6.0	0.9	408	125	1
VDC @ 85°C	µF	KEMET/EIA	(See below for part options)	(See below for part options)	µA at +25°C Maximum/5 Minutes	% at +25°C 120 Hz Maximum	Ω at +25°C 100 kHz Maximum	mA at +25°C 100 kHz	°C	Reflow Temp ≤ 260°C
Rated Voltage	Rated Cap	Case Code/ Case Size	KEMET Part Number	MIL-PRF-55365/4 Part Number	DC Leakage	DF	ESR	Maximum Allowable Ripple Current	Maximum Operating Temp	MSL

(1) To complete KEMET/CWR part number, insert M for ±20%, K for ±10%, or J for ±5%. Designates Capacitance Tolerance.
(2) To complete KEMET/CWR part number, insert failure rate letter per the Ordering Information found on page 2. Designates Reliability Level.
(3) To complete KEMET/CWR part number, insert B = Gold-plated, C = Hot solder dipped, H = Solder-plated or K = Solder fused. Designates termination finish.
(4) To complete KEMET part number, insert 4250, 4251, 4252 or TLVL. Designates Surge current option.
(5) To complete CWR part number, insert A = +25°C after Weibull, B = −55°C +85°C after Weibull, or C = −55°C +85°C before Weibull. Designates surge current option. Refer to Ordering Information for additional detail.

Downloaded from Arrow.com.

Table 1 – Ratings & Part Number Reference cont.

Rated Voltage	Rated Cap	Case Code/ Case Size	KEMET Part Number	MIL-PRF-55365/4 Part Number	DC Leakage	DF	ESR	Maximum Allowable Ripple Current (rms)	Maximum Operating Temp	MSL
VDC @ 85°C	µF	KEMET/EIA	(See below for part options)	(See below for part options)	µA at +25°C Maximum/5 Minutes	% at +25°C 120 Hz Maximum	Ω at +25°C 100 kHz Maximum	mA at +25°C 100 kHz	°C	Reflow Temp ≤ 260°C
25	0.33	A/1005	T409A334(1)025(2)(3)(4)	CWR09K(3)334(1)(2)(5)	1.0	6.0	15.0	58	125	1
25	0.68	B/1505	T409B684(1)025(2)(3)(4)	CWR09K(3)684(1)(2)(5)	1.0	6.0	7.5	97	125	1
25	1	C/2005	T409C105(1)025(2)(3)(4)	CWR09K(3)105(1)(2)(5)	1.0	6.0	6.5	107	125	1
25	1.5	D/1510	T409D155(1)025(2)(3)(4)	CWR09K(3)155(1)(2)(5)	1.0	6.0	6.5	111	125	1
25	2.2	E/2010	T409E225(1)025(2)(3)(4)	CWR09K(3)225(1)(2)(5)	1.0	6.0	3.5	160	125	1
25	4.7	F/2214	T409F475(1)025(2)(3)(4)	CWR09K(3)475(1)(2)(5)	2.0	6.0	2.5	200	125	1
25	6.8	G/2711	T409G685(1)025(2)(3)(4)	CWR09K(3)685(1)(2)(5)	2.0	6.0	1.2	323	125	1
25	10	G/2711	T409G106(1)025(2)(3)(4)	CWR09K(3)106(1)(2)(5)	3.0	6.0	1.4	299	125	1
25	15	H/2915	T409H156(1)025(2)(3)(4)	CWR09K(3)156(1)(2)(5)	4.0	6.0	1.0	387	125	1
35	0.22	A/1005	T409A224(1)035(2)(3)(4)	CWR09M(3)224(1)(2)(5)	1.0	6.0	18.0	53	125	1
35	0.47	B/1505	T409B474(1)035(2)(3)(4)	CWR09M(3)474(1)(2)(5)	1.0	6.0	10.0	84	125	1
35	0.68	C/2005	T409C684(1)035(2)(3)(4)	CWR09M(3)684(1)(2)(5)	1.0	6.0	8.0	97	125	1
35	1	D/1510	T409D105(1)035(2)(3)(4)	CWR09M(3)105(1)(2)(5)	1.0	6.0	6.5	111	125	1
35	1.5	E/2010	T409E155(1)035(2)(3)(4)	CWR09M(3)155(1)(2)(5)	1.0	6.0	4.5	141	125	1
35	3.3	F/2214	T409F335(1)035(2)(3)(4)	CWR09M(3)335(1)(2)(5)	1.0	6.0	2.5	200	125	1
35	4.7	G/2711	T409G475(1)035(2)(3)(4)	CWR09M(3)475(1)(2)(5)	2.0	6.0	1.5	289	125	1
35	6.8	H/2915	T409H685(1)035(2)(3)(4)	CWR09M(3)685(1)(2)(5)	3.0	6.0	1.3	340	125	1
50	0.1	A/1005	T409A104(1)050(2)(3)(4)	CWR09N(3)104(1)(2)(5)	1.0	6.0	22.0	48	125	1
50	0.15	A/1005	T409A154(1)050(2)(3)(4)	CWR09N(3)154(1)(2)(5)	1.0	6.0	17.0	54	125	1
50	0.22	B/1505	T409B224(1)050(2)(3)(4)	CWR09N(3)224(1)(2)(5)	1.0	6.0	14.0	71	125	1
50	0.33	B/1505	T409B334(1)050(2)(3)(4)	CWR09N(3)334(1)(2)(5)	1.0	6.0	12.0	76	125	1
50	0.47	C/2005	T409C474(1)050(2)(3)(4)	CWR09N(3)474(1)(2)(5)	1.0	6.0	8.0	97	125	1
50	0.68	D/1510	T409D684(1)050(2)(3)(4)	CWR09N(3)684(1)(2)(5)	1.0	6.0	7.0	107	125	1
50	1	E/2010	T409E105(1)050(2)(3)(4)	CWR09N(3)105(1)(2)(5)	1.0	6.0	6.0	122	125	1
50	1.5	F/2214	T409F155(1)050(2)(3)(4)	CWR09N(3)155(1)(2)(5)	1.0	6.0	4.0	158	125	1
50	2.2	F/2214	T409F225(1)050(2)(3)(4)	CWR09N(3)225(1)(2)(5)	2.0	6.0	2.5	200	125	1
50	3.3	G/2711	T409G335(1)050(2)(3)(4)	CWR09N(3)335(1)(2)(5)	2.0	6.0	2.0	250	125	1
50	4.7	H/2915	T409H475(1)050(2)(3)(4)	CWR09N(3)475(1)(2)(5)	3.0	6.0	1.5	316	125	1
VDC @ 85°C	µF	KEMET/EIA	(See below for part options)	(See below for part options)	µA at +25°C Maximum/5 Minutes	% at +25°C 120 Hz Maximum	Ω at +25°C 100 kHz Maximum	mA at +25°C 100 kHz	°C	Reflow Temp ≤ 260°C
Rated Voltage	Rated Cap	Case Code/ Case Size	KEMET Part Number	MIL-PRF-55365/4 Part Number	DC Leakage	DF	ESR	Maximum Allowable Ripple Current	Maximum Operating Temp	MSL

(1) To complete KEMET/CWR part number, insert M for ±20%, K for ±10%, or J for ±5%. Designates Capacitance Tolerance.
(2) To complete KEMET/CWR part number, insert failure rate letter per the Ordering Information found on page 2. Designates Reliability Level.
(3) To complete KEMET/CWR part number, insert B = Gold-plated, C = Hot solder dipped, H = Solder-plated or K = Solder fused. Designates termination finish.
(4) To complete KEMET part number, insert 4250, 4251, 4252 or TLVL. Designates Surge current option.
(5) To complete CWR part number, insert A = +25°C after Weibull, B = −55°C +85°C after Weibull, or C = −55°C +85°C before Weibull. Designates surge current option. Refer to Ordering Information for additional detail.

Downloaded from Arrow.com.

Recommended Voltage Derating Guidelines

	-55°C to 85°C	85°C to 125°C
% Change in Working DC Voltage with Temperature	V_R	67% of V_R
Recommended Maximum Application Voltage	50% of V_R	33% of V_R

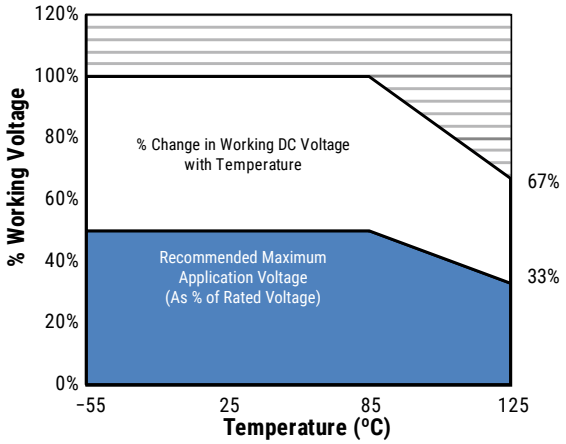

Ripple Current/Ripple Voltage

Permissible AC ripple voltage and current are related to equivalent series resistance (ESR) and the power dissipation capabilities of the device. Permissible AC ripple voltage which may be applied is limited by two criteria:

1. The positive peak AC voltage plus the DC bias voltage, if any, must not exceed the DC voltage rating of the capacitor.
2. The negative peak AC voltage in combination with bias voltage, if any, must not exceed the allowable limits specified for the reverse voltage. See the Reverse Voltage section for allowable limits.

The maximum power dissipation by case size can be determined using the table at right. The maximum power dissipation rating stated in the table must be reduced with increasing environmental operating temperatures. Refer to the table below for temperature compensation requirements.

Temperature Compensation Multipliers for Maximum Ripple Current		
T ≤ 25°C	T ≤ 85°C	T ≤ 125°C
1.00	0.90	0.40

T = Environmental Temperature

The maximum power dissipation rating must be reduced with increasing environmental operating temperatures. Refer to the Temperature Compensation Multiplier table for details.

KEMET Case Code	EIA Case Code	Maximum Power Dissipation (P max) mWatts at 25°C w/+20°C Rise
A	2513	50
B	3813	70
C	5113	75
D	3825	80
E	5125	90
F	5634	100
G	6728	125
H	7238	150
X	6954	165

Using the P max of the device, the maximum allowable rms ripple current or voltage may be determined.

$I(max) = \sqrt{P\ max/R}$
$E(max) = Z\sqrt{P\ max/R}$

I = rms ripple current (amperes)
E = rms ripple voltage (volts)
P max = maximum power dissipation (watts)
R = ESR at specified frequency (ohms)
Z = Impedance at specified frequency (ohms)

Downloaded from Arrow.com.

Reverse Voltage

Solid tantalum capacitors are polar devices and may be permanently damaged or destroyed if connected with the wrong polarity. The positive terminal is identified on the capacitor body by a stripe, plus, in some cases a beveled edge. A small degree of transient reverse voltage is permissible for short periods per the table. The capacitors should not be operated continuously in reverse mode, even within these limits.

Temperature	Permissible Transient Reverse Voltage
25°C	15% of Rated Voltage
85°C	5% of Rated Voltage
125°C	1% of Rated Voltage

Table 2 – Land Dimensions/Courtyard

KEMET	Metric Size Code	Density Level A: Maximum (Most) Land Protrusion (mm)					Density Level B: Median (Nominal) Land Protrusion (mm)					Density Level C: Minimum (Least) Land Protrusion (mm)				
Case	EIA	L	W	S	V1	V2	L	W	S	V1	V2	L	W	S	V1	V2
A[1]	1005	2.19	1.44	0.15	5.54	2.66	1.89	1.32	0.15	4.44	2.16	1.52	1.22	0.29	3.58	1.90
B	1505	2.30	1.44	1.20	6.80	2.66	1.90	1.32	1.40	5.70	2.16	1.52	1.22	1.56	4.84	1.90
C	2005	2.30	1.44	2.47	8.08	2.66	1.90	1.32	2.67	6.98	2.16	1.52	1.22	2.83	6.12	1.90
D	1510	2.30	2.58	1.20	6.80	3.92	1.90	2.46	1.40	5.70	3.42	1.52	2.36	1.56	4.84	3.16
E	2010	2.30	2.58	2.47	8.08	3.92	1.90	2.46	2.67	6.98	3.42	1.52	2.36	2.83	6.12	3.16
F	2214	2.30	3.47	2.98	8.58	4.82	1.90	3.35	3.18	7.48	4.32	1.52	3.25	3.34	6.62	4.06
G	2711	2.81	2.84	3.10	9.72	4.18	2.41	2.72	3.30	8.62	3.68	2.03	2.62	3.46	7.76	3.42
H	2915	2.81	3.84	3.61	10.24	5.20	2.41	3.72	3.81	9.14	4.70	2.03	3.62	3.97	8.28	4.44
X	2824	2.73	3.22	3.46	9.92	6.80	2.33	3.10	3.66	8.82	6.30	1.95	3.00	3.82	7.96	6.04

Density Level A: *For low-density product applications. Recommended for wave solder applications and provides a wider process window for reflow solder processes.*
Density Level B: *For products with a moderate level of component density. Provides a robust solder attachment condition for reflow solder processes.*
Density Level C: *For high component desity product applications. Before adapting the minimum land pattern variations, the user should perform qualification testing based on the conditions outlined in IPC standard 7351 (IPC–7351).*
[1] *Land pattern geometry is too small for silkscreen outline.*

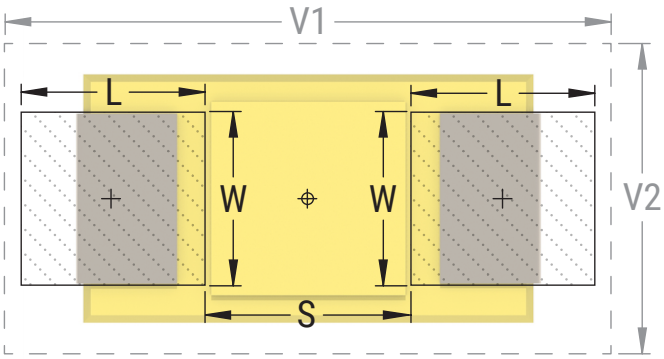

Grid Placement Courtyard

Downloaded from Arrow.com.

Soldering Process

KEMET's families of surface mount capacitors are compatible with wave (single or dual), convection, IR, or vapor phase reflow techniques. Preheating of these components is recommended to avoid extreme thermal stress. KEMET's recommended profile conditions for convection and IR reflow reflect the profile conditions of the IPC/J–STD–020D standard for moisture sensitivity testing. The devices can safely withstand a maximum of three reflow passes at these conditions.

Please note that although the X/7343–43 case size can withstand wave soldering, the tall profile (4.3 mm maximum) dictates care in wave process development.

Hand soldering should be performed with care due to the difficulty in process control. If performed, care should be taken to avoid contact of the soldering iron to the molded case. The iron should be used to heat the solder pad, applying solder between the pad and the termination, until reflow occurs. Once reflow occurs, the iron should be removed immediately. "Wiping" the edges of a chip and heating the top surface is not recommended.

During typical reflow operations, a slight darkening of the gold-colored epoxy may be observed. This slight darkening is normal and not harmful to the product. Marking permanency is not affected by this change.

Profile Feature	SnPb Assembly	Pb-Free Assembly
Preheat/Soak		
Temperature Minimum (T_{Smin})	100°C	150°C
Temperature Maximum (T_{Smax})	150°C	200°C
Time (t_s) from T_{smin} to T_{smax})	60 – 120 seconds	60 – 120 seconds
Ramp-up Rate (T_L to T_P)	3°C/second maximum	3°C/second maximum
Liquidous Temperature (T_L)	183°C	217°C
Time Above Liquidous (t_L)	60 – 150 seconds	60 – 150 seconds
Peak Temperature (T_P)	220°C* 235°C**	250°C* 260°C**
Time within 5°C of Maximum Peak Temperature (t_p)	20 seconds maximum	30 seconds maximum
Ramp-down Rate (T_P to T_L)	6°C/second maximum	6°C/second maximum
Time 25°C to Peak Temperature	6 minutes maximum	8 minutes maximum

Note: All temperatures refer to the center of the package, measured on the package body surface that is facing up during assembly reflow.
** For Case Size height > 2.5 mm*
*** For Case Size height ≤ 2.5 mm*

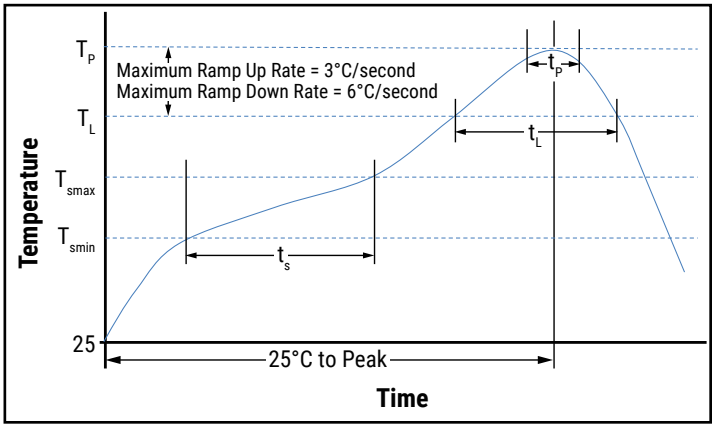

Storage

Tantalum chip capacitors should be stored in normal working environments. While the chips themselves are quite robust in other environments, solderability will be degraded by exposure to high temperatures, high humidity, corrosive atmospheres, and long term storage. In addition, packaging materials will be degraded by high temperature – reels may soften or warp and tape peel force may increase. KEMET recommends that maximum storage temperature not exceed 40°C and maximum storage humidity not exceed 60% relative humidity. Temperature fluctuations should be minimized to avoid condensation on the parts and atmospheres should be free of chlorine and sulphur bearing compounds. For optimized solderability chip stock should be used promptly, preferably within three years of receipt.

Downloaded from Arrow.com.

Construction

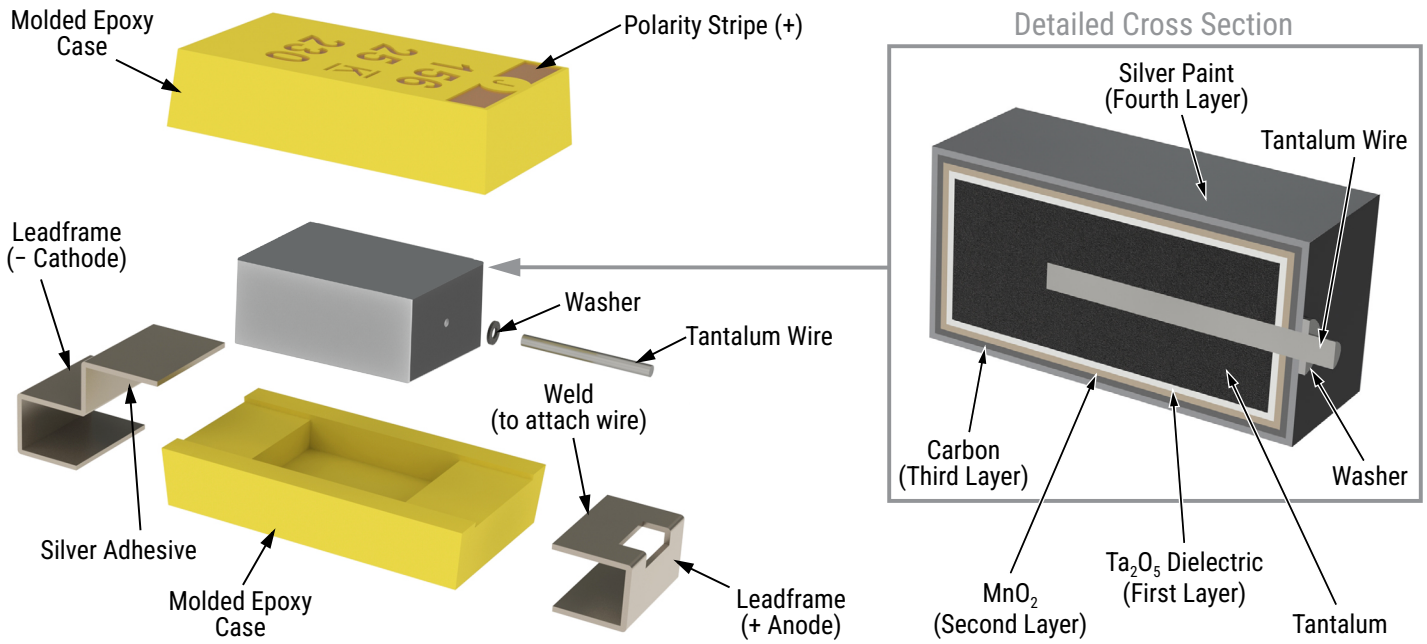

Capacitor Marking

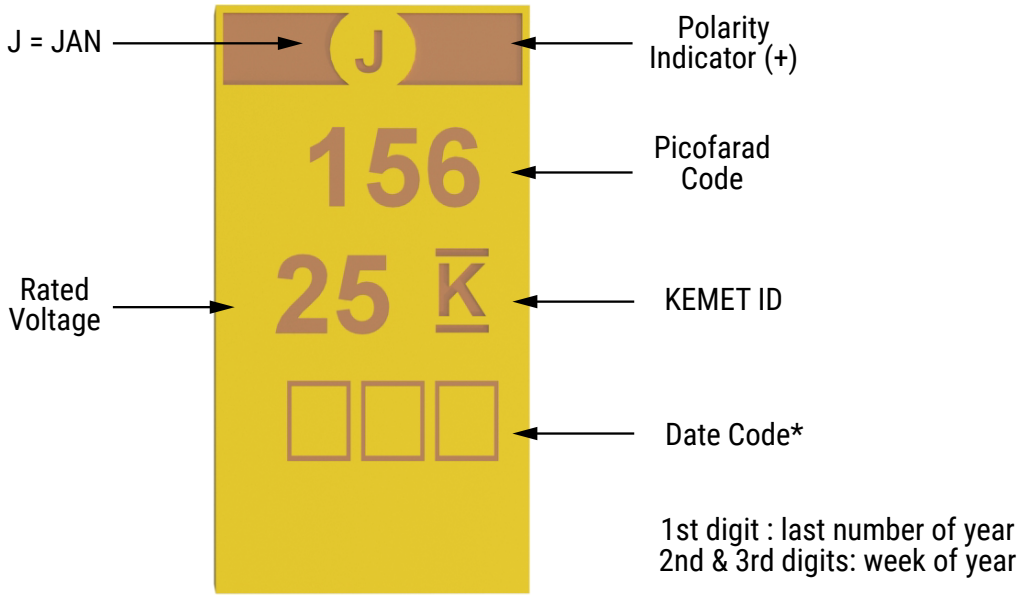

Downloaded from Arrow.com.

Tape & Reel Packaging Information

KEMET's molded tantalum and aluminum chip capacitor families are packaged in 8 and 12 mm plastic tape on 7" and 13" reels in accordance with *EIA Standard 481*: Embossed Carrier Taping of Surface Mount Components for Automatic Handling. This packaging system is compatible with all tape-fed automatic pick-and-place systems.

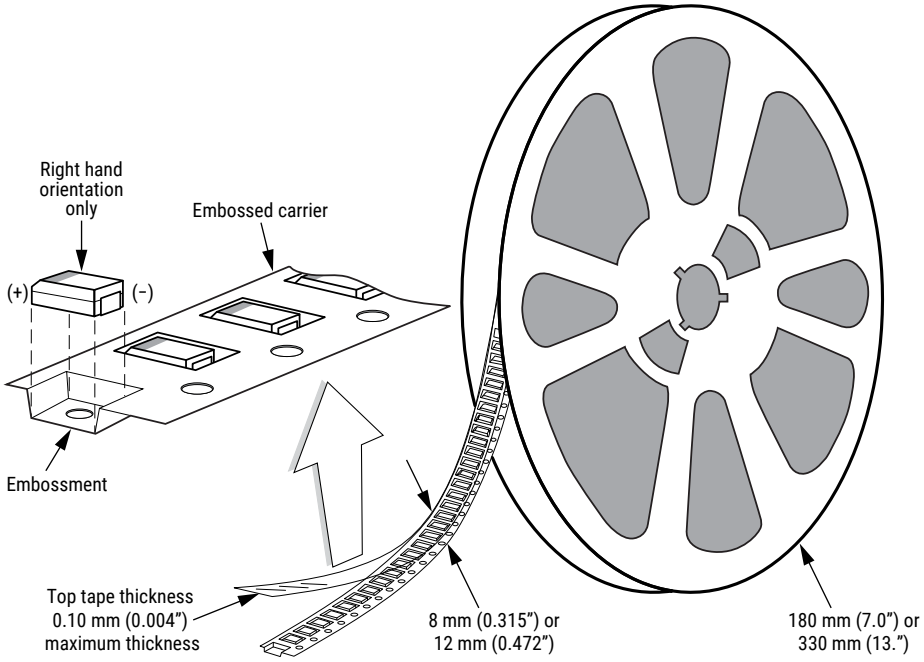

Table 3 – Packaging Quantity

KEMET Case Codes		Tape Width (mm)	Tape and Reel Dimensions	
			180 mm (7" diameter)	330 mm (13" diameter)
A	1005	8	2,500	9,500
B	1505	12	2,500	9,500
C	2005	12	2,500	9,500
D	1510	12	2,500	9,500
E	2010	12	2,500	9,500
F	2214	12	500	3,500
G	2711	12	500	2,500
H	2915	12	500	2,500
X	2824	12	500	2,500

Downloaded from Arrow.com.

Figure 1 – Embossed (Plastic) Carrier Tape Dimensions

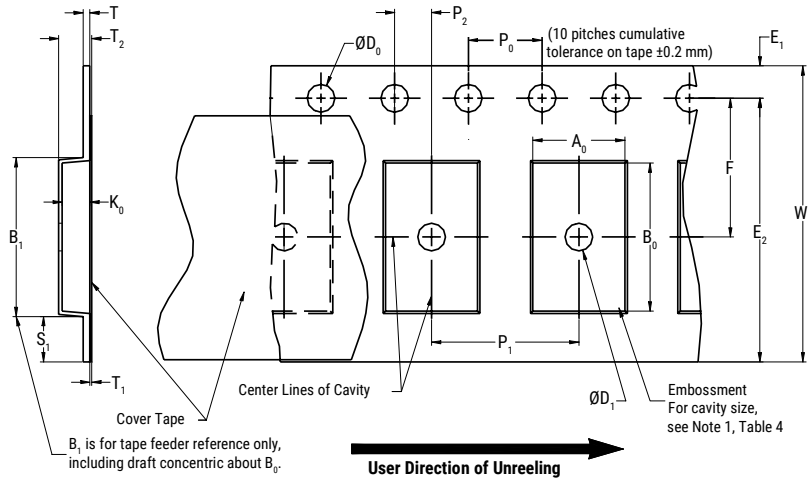

Table 4 – Embossed (Plastic) Carrier Tape Dimensions

Metric will govern

Constant Dimensions — Millimeters (Inches)									
Tape Size	D_0	D_1 Minimum Note 1	E_1	P_0	P_2	R Reference Note 2	S_1 Minimum Note 3	T Maximum	T_1 Maximum
8 mm	1.5 +0.10/−0.0 (0.059 +0.004/−0.0)	1.0 (0.039)	1.75 ±0.10 (0.069 ±0.004)	4.0 ±0.10 (0.157 ±0.004)	2.0 ±0.05 (0.079 ±0.002)	25.0 (0.984)	0.600 (0.024)	0.600 (0.024)	0.100 (0.004)
12 mm		1.5 (0.059)				30 (1.181)			

Variable Dimensions — Millimeters (Inches)								
Tape Size	Pitch	B_1 Maximum Note 4	E_2 Minimum	F	P_1	T_2 Maximum	W Maximum	A_0, B_0 & K_0
8 mm	Single (4 mm)	4.35 (0.171)	6.25 (0.246)	3.5 ±0.05 (0.138 ±0.002)	4.0 ±0.10 (0.157 ±0.004)	2.5 (0.098)	8.3 (0.327)	Note 5
12 mm	Single (4 mm) and Double (8 mm)	8.2 (0.323)	10.25 (0.404)	5.5 ±0.05 (0.217 ±0.002)	8.0 ±0.10 (0.315 ±0.004)	4.6 (0.181)	12.3 (0.484)	

1. *The embossment hole location shall be measured from the sprocket hole controlling the location of the embossment. Dimensions of embossment location and hole location shall be applied independent of each other.*
2. *The tape, with or without components, shall pass around R without damage (see Figure 4).*
3. *If S_1 < 1.0 mm, there may not be enough area for cover tape to be properly applied (see EIA Standard 481–D, paragraph 4.3, section b).*
4. *B_1 dimension is a reference dimension for tape feeder clearance only.*
5. *The cavity defined by A_0, B_0 and K_0 shall surround the component with sufficient clearance that:*
   (a) the component does not protrude above the top surface of the carrier tape.
   (b) the component can be removed from the cavity in a vertical direction without mechanical restriction, after the top cover tape has been removed.
   (c) rotation of the component is limited to 20° maximum for 8 and 12 mm tapes (see Figure 2).
   (d) lateral movement of the component is restricted to 0.5 mm maximum for 8 mm and 12 mm wide tape (see Figure 3).
   (e) see Addendum in EIA Standard 481–D for standards relating to more precise taping requirements.

Downloaded from Arrow.com.

Packaging Information Performance Notes

1. Cover Tape Break Force: 1.0 kg minimum.
2. Cover Tape Peel Strength: The total peel strength of the cover tape from the carrier tape shall be:

Tape Width	Peel Strength
8 mm	0.1 to 1.0 Newton (10 to 100 gf)
12 and 16 mm	0.1 to 1.3 Newton (10 to 130 gf)

The direction of the pull shall be opposite the direction of the carrier tape travel. The pull angle of the carrier tape shall be 165° to 180° from the plane of the carrier tape. During peeling, the carrier and/or cover tape shall be pulled at a velocity of 300 ±10 mm/minute.
3. Labeling: Bar code labeling (standard or custom) shall be on the side of the reel opposite the sprocket holes. *Refer to EIA Standards 556 and 624*.

Figure 2 – Maximum Component Rotation

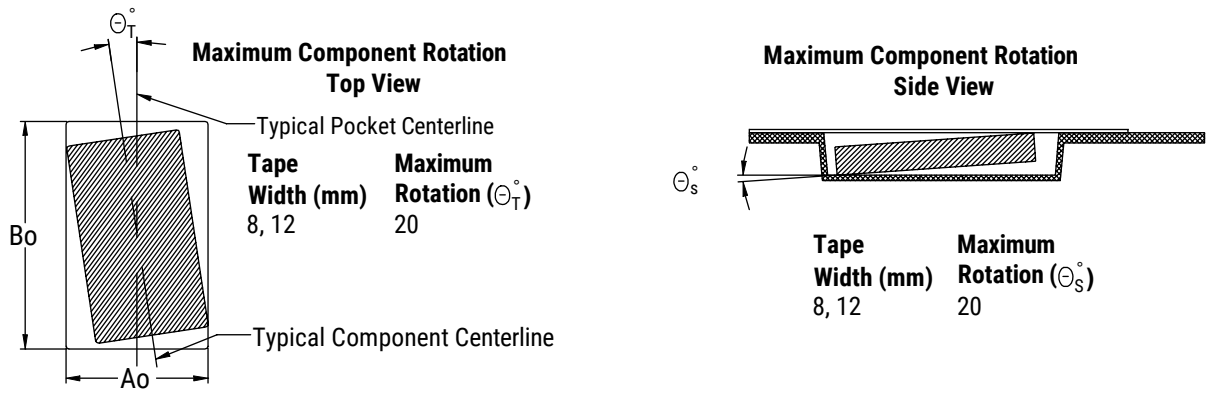

Figure 3 – Maximum Lateral Movement

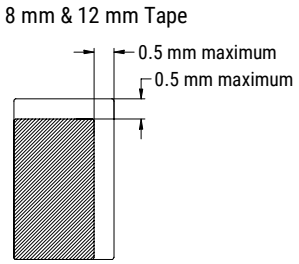

Figure 4 – Bending Radius

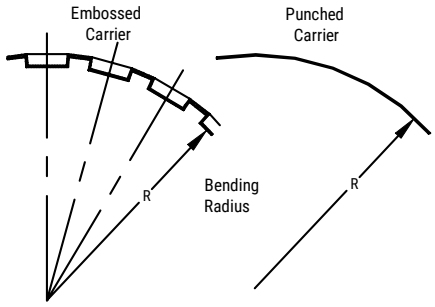

Downloaded from Arrow.com.

Figure 5 – Reel Dimensions

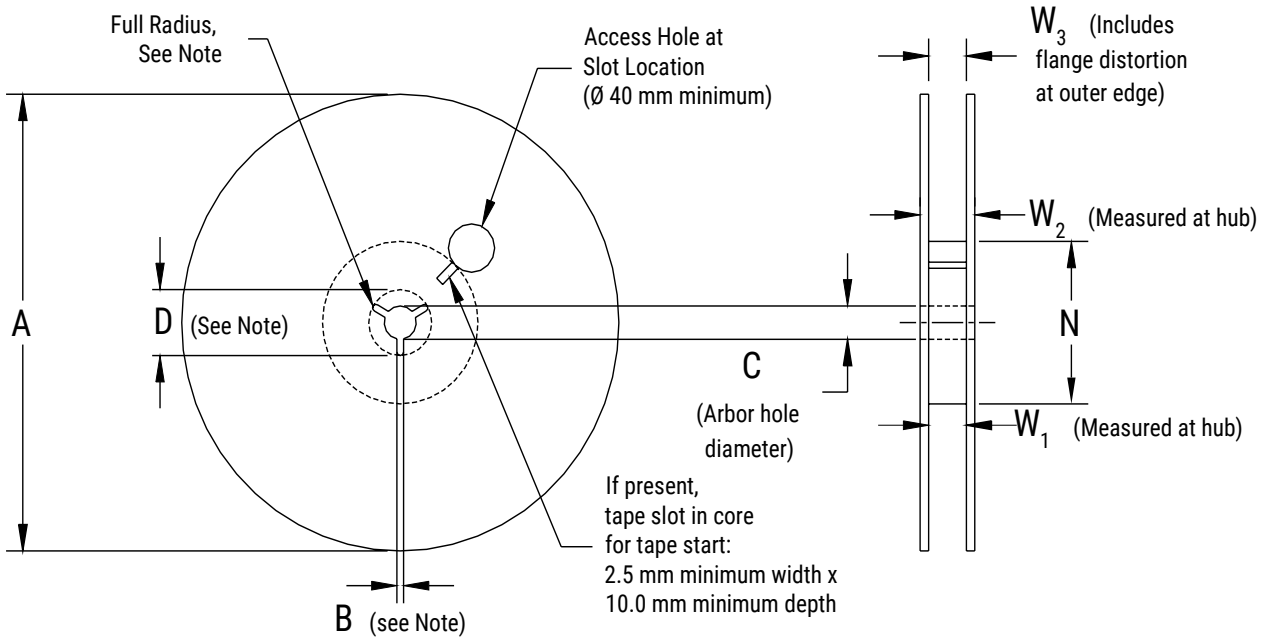

Note: Drive spokes optional; if used, dimensions B and D shall apply.

Table 5 – Reel Dimensions

Metric will govern

Constant Dimensions — Millimeters (Inches)				
Tape Size	A	B Minimum	C	D Minimum
8 mm	178 ±0.20 (7.008 ±0.008) or 330 ±0.20 (13.000 ±0.008)	1.5 (0.059)	13.0 +0.5/−0.2 (0.521 +0.02/−0.008)	20.2 (0.795)
12 mm				

Variable Dimensions — Millimeters (Inches)				
Tape Size	N Minimum	W_1	W_2 Maximum	W_3
8 mm	50 (1.969)	8.4 +1.5/−0.0 (0.331 +0.059/−0.0)	14.4 (0.567)	Shall accommodate tape width without interference
12 mm		12.4 +2.0/−0.0 (0.488 +0.078/−0.0)	18.4 (0.724)	

Downloaded from Arrow.com.

Figure 6 – Tape Leader & Trailer Dimensions

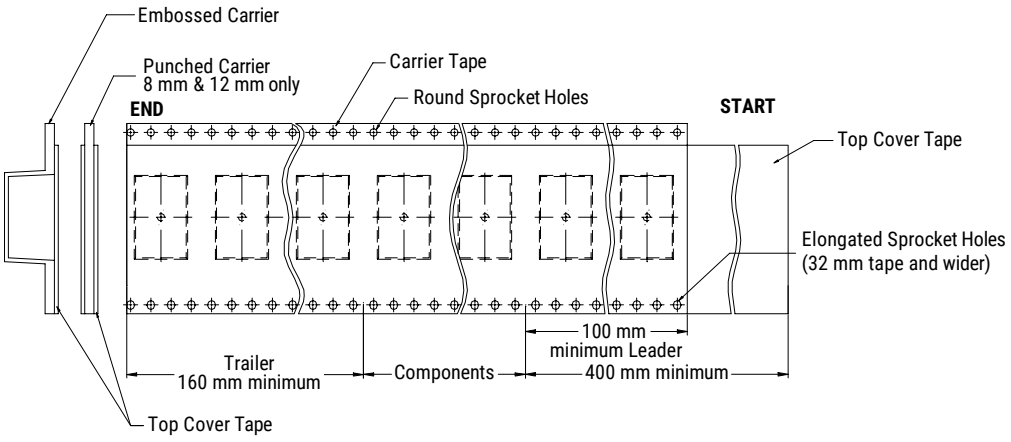

Figure 7 – Maximum Camber

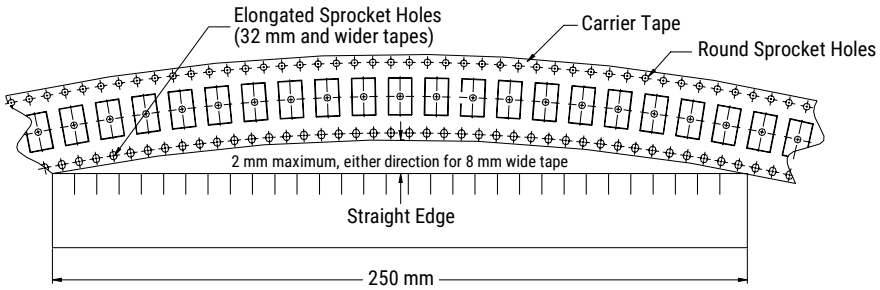

Downloaded from Arrow.com.

KEMET Electronics Corporation Sales Offices

For a complete list of our global sales offices, please visit https://www.yageogroup.com/SalesResources/SalesOffices

Disclaimer

All product specifications, statements, information and data (collectively, the "Information") in this datasheet are subject to change. The customer is responsible for checking and verifying the extent to which the Information contained in this publication is applicable to an order at the time the order is placed. All Information given herein is believed to be accurate and reliable, but it is presented without guarantee, warranty, or responsibility of any kind, expressed or implied.

Statements of suitability for certain applications are based on KEMET Electronics Corporation's ("KEMET") knowledge of typical operating conditions for such applications, but are not intended to constitute – and KEMET specifically disclaims – any warranty concerning suitability for a specific customer application or use. The Information is intended for use only by customers who have the requisite experience and capability to determine the correct products for their application. Any technical advice inferred from this Information or otherwise provided by KEMET with reference to the use of KEMET's products is given gratis, and KEMET assumes no obligation or liability for the advice given or results obtained.

Although KEMET designs and manufactures its products to the most stringent quality and safety standards, given the current state of the art, isolated component failures may still occur. Accordingly, customer applications which require a high degree of reliability or safety should employ suitable designs or other safeguards (such as installation of protective circuitry or redundancies) in order to ensure that the failure of an electrical component does not result in a risk of personal injury or property damage.

Although all product–related warnings, cautions and notes must be observed, the customer should not assume that all safety measures are indicated or that other measures may not be required.

KEMET is a registered trademark of KEMET Electronics Corporation.

Downloaded from Arrow.com.