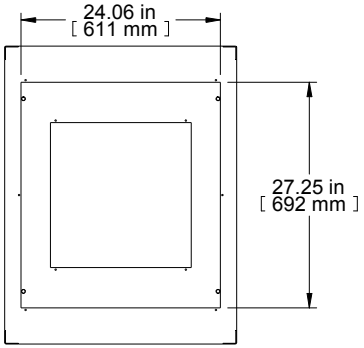

TOP VIEW
TOP OPENING

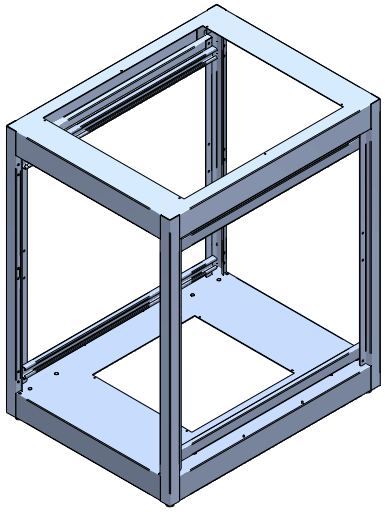

ISOMETRIC

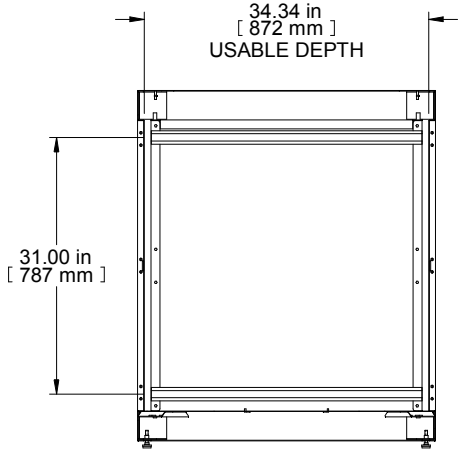

SECTION B-B

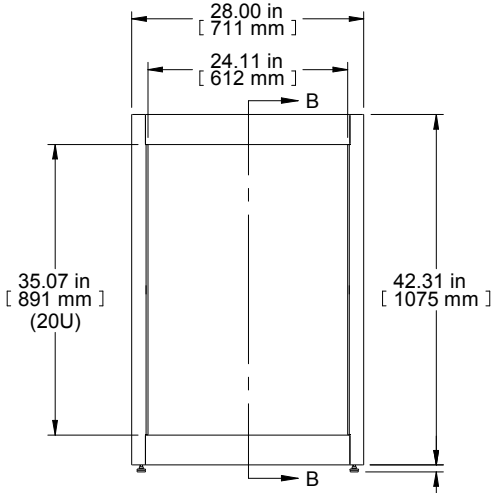

FRONT VIEW

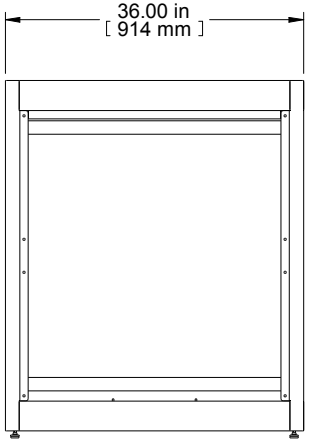

R.S. VIEW

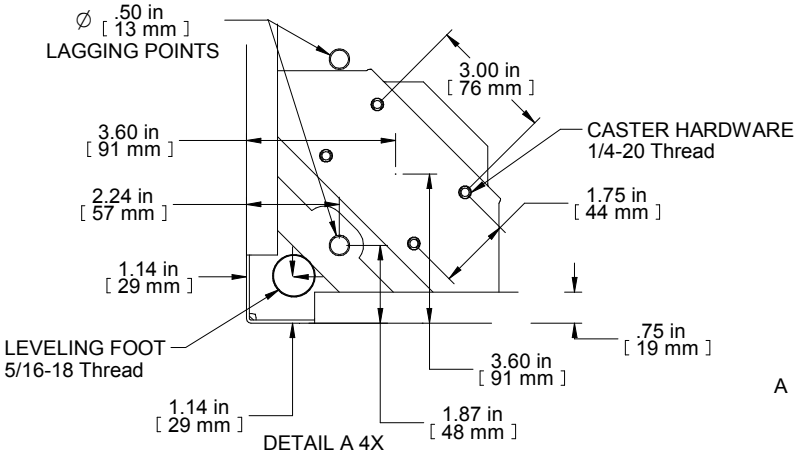

DETAIL A 4X
SCALE 5:1

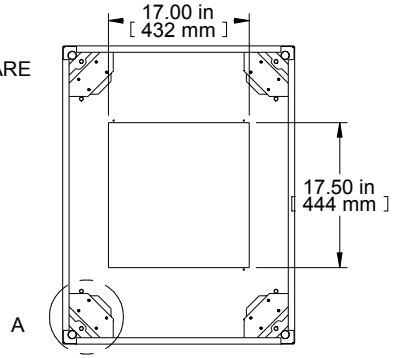

BOTTOM VIEW
BOTTOM OPENING

PART NUMBERS	
C2F243536BK1	PAINTED BLACK TEXTURE
C2F243536LG1	PAINTED LIGHT GRAY TEXTURE

NOTES

Welded Assembly
See Hammond Website for Frame Accessories.

Data subject to change without notice. Isometric drawing not to scale.
Les données sont sujettes à changement sans préavis.

HAMMOND MANUFACTURING®

www.hammondmfg.com

PART NO. C2F243536

Downloaded from Arrow.com.