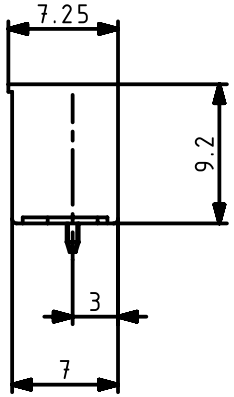

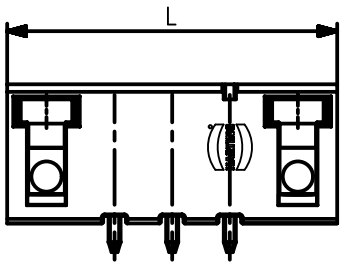

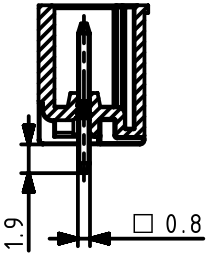

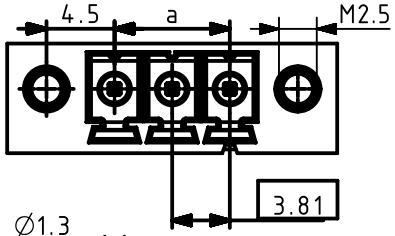

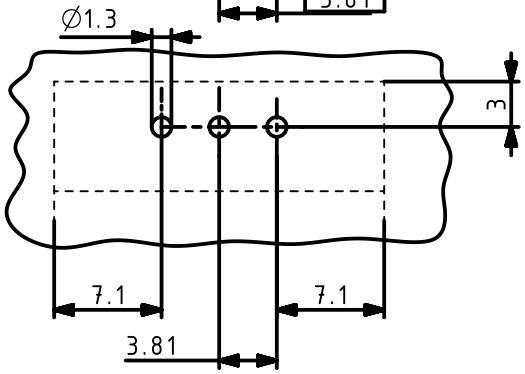

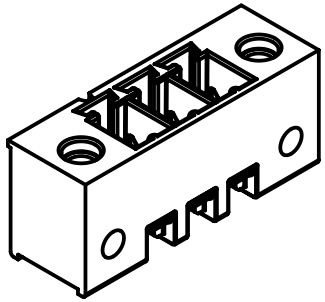

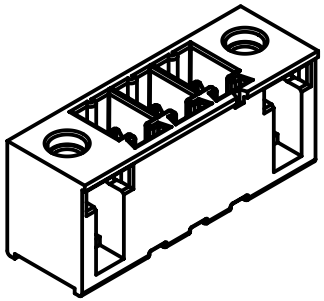

Part number	Poles	Dim. a	Dim. L
14120215005000	02	3.81	18.01
14120315005000	03	7.62	21.82
14120415005000	04	11.43	25.63
14120515005000	05	15.24	29.44
14120615005000	06	19.05	33.25
14120715005000	07	22.86	37.06
14120815005000	08	26.67	40.87
14120915005000	09	30.48	44.68
14121015005000	10	34.29	48.49
14121115005000	11	38.10	52.3
14121215005000	12	41.91	56.11
14121315005000	13	45.72	59.92
14121415005000	14	49.53	63.73
14121515005000	15	53.34	67.54
14121615005000	16	57.15	71.35
14121715005000	17	60.96	75.16
14121815005000	18	64.77	78.97
14121915005000	19	68.58	82.78
14122015005000	20	72.39	86.59
14122115005000	21	76.20	90.4
14122215005000	22	80.01	94.21

further information see DS 14121400201

All Dimensions in mm
Original Size DIN A4

Scale 2:1

Free size tol.

Ref.

Sub.

All rights reserved

Department EC PD - DE

HARTING Electronics GmbH
D-32339 Espelkamp

Created by	Inspected by	Standardisation	Date	State
KAHLERK	TADJE	HOFFMANN	2015-10-06	Final Release

Title: har-flexicon 3.81 MTV-XX TBXXX BK SL

Doc-Key / ECM-Nr. 100618453/UGD/000/C 500000093942

Type: TB

Number: 1412XX15005000

Rev. C

Page 1/1

Downloaded from Arrow.com.

A4