AXICOM IM-B RELAY

SIGNAL RELAYS

TE Connectivity (TE)'s Axicom IM-B signal relays, as part of our smallest types of relays, offer a wide range of variations suitable for many applications. The IM-B series are equipped with a 1 pole normally open contact, available as high dielectric or high load version.

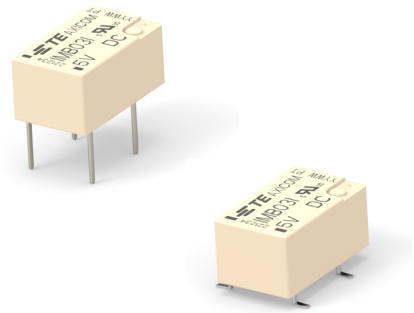

FEATURES

- Minimum board-space 60mm^2
- Slim line 10x6mm (0.39x0.24") and low profile 5.65mm (0.222")
- Switching power 60W / 62.5VA (150VA for IMBxxI)
- Switching voltage 220VDC / 250VAC (400VDC for IMBxxI)
- Switching current 2A
- Bifurcated or single contacts
- High mechanical shock resistance

APPROVALS

- UL 61810-1 (former UL 508) File No. E214025

APPLICATIONS

- Telecommunication
- Access and transmission equipment
- Optical network terminals
- Modems
- Office and business equipment
- Consumer electronics
- Measurement and test equipment
- Industrial
- Control
- Medical equipment
- HVAC

Downloaded from Arrow.com.

CONTACT DATA

	C High Dielectric version	I High Load version
Contact arrangement	1 Form A, 1 NO	
Max. switching voltage	220VDC 250VAC	400VDC 250VAC
Rated current	2A	2A
Limiting continuous current	2A	2A
Contact material	PdRu Au covered	AgNi Au covered
Contact style	Twin contacts	Single contacts
Minimum switching voltage	100µV	
Initial contact resistance	<100mΩ at 10mA/30mV	
Thermoelectric potential	<10µV	
Operate time	Typ. 1ms, max. 3ms	
Release time		
Without diode in parallel	Typ. 1ms, max. 3ms	
With diode in parallel	Typ. 1ms, max. 3ms	
Bounce time max.	Typ. 1ms, max. 5ms	
Electrical endurance		
At contact application 0 (≤ 30mV / ≤ 10mA)	min. 2.5×10^6 operations	
Cable load open end	min. 2×10^6 operations	
Resistive, 125VDC / 0.24A - 30W	min. 5×10^5 operations	
Resistive, 220 VDC / 0.27A - 60W	min. 1×10^5 operations	
Resistive, 250VAC / 0.25A - 62.5VA	min. 1×10^5 operations	
Resistive, 30VDC / 1A - 30W	min. 5×10^5 operations	
Resistive, 30VDC / 2A - 60W	min. 1×10^5 operations	
UL contact rating	30VDC, 2A, 60W 110VDC, 0.3A, 33W 220VDC, 0.27A, 60W 400VDC, 0.15A 60W (only IMBxxI) 125VAC, 0.5A 62.5VA 125VAC, 0.8A 100VA (only IMBxxI) 250VAC, 0.25A, 62.5VA 250VAC, 0.6A, 150VA (only IMBxxI)	
Mechanical endurance	10^8 operations	

COIL DATA

Magnetic system	Monostable, bistable
Coil voltage range	1.5 to 24VDC

COIL VERSIONS, STANDARD VERSION, MONOSTABLE, 1 COIL

Coil code	Rated voltage VDC	Operate voltage VDC)	Release voltage VDC	Coil resistance Ω±10%	Rated coil power mW
00	1.5	1.13	0.15	16	140
08	2.4	1.80	0.24	41	140
01	3	2.25	0.30	64	140
02	4	3.38	0.45	145	140
03	5	3.75	0.50	178	140
04	6	4.50	0.60	257	140
05	9	6.75	0.90	579	140
06	12	9.00	1.20	1029	140
07	24	18.00	2.40	2880	200

All figures are given for coil without pre-energization, at ambient temperature +23°C

MAX. DC LOAD BREAKING CAPACITY

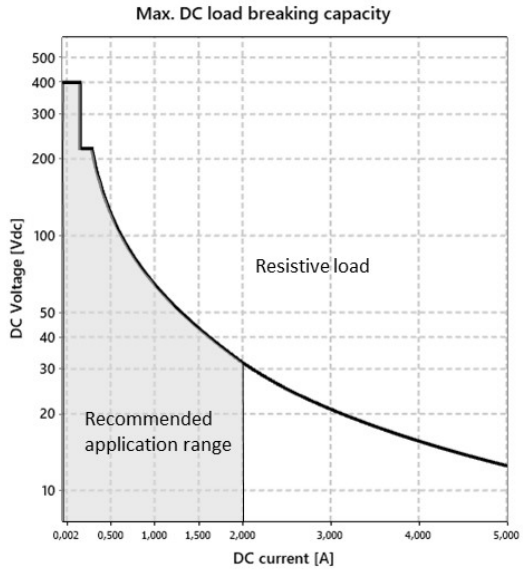

COIL OPERATING RANGE

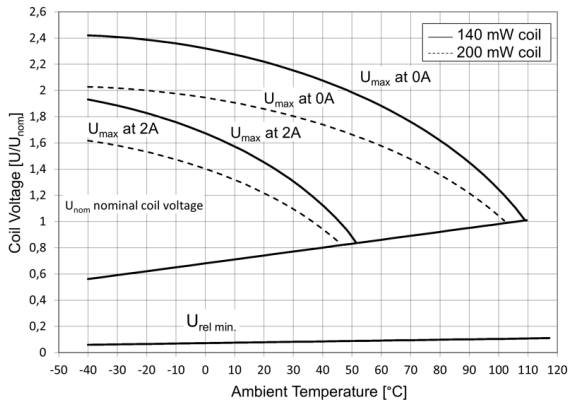

Downloaded from Arrow.com.

INSULATION

	C* High Dielectric version	I High Load version
Initial dielectric strength		
Between open contacts	$2500V_{rms}$	$1000V_{rms}$
Between contact and coil	$3500V_{rms}$	$1800V_{rms}$
Initial surge withstand voltage		
Between open contacts	$3500V_{rms}$	$1500V_{rms}$
Between contact and coil	$4900V_{rms}$	$2500V_{rms}$
Initial insulation resistance		
Between insulated elements	$>10^9\Omega$	
Capacitance		
Between open contacts	max. 1pF	
Between contact and coil	max. 2pF	
Between adjacent contacts	max. 2pF	

*this relay contains SF6 (Sulfur hexafluoride, CAS number: 2551-62-4) for dielectric strength enhancement, SF6 is hermetically sealed in relay without leaks to air during normal application as recommended per the applicable product specification. It is clarified that the usage of SF6 in mini signal relay is not prohibited by related regulations. Please contact TE local sales or field engineer for further information and detailed material declaration.

RF DATA

Isolation at 100MHz/900MHz	37.0dB/18.8dB
Insertion loss at 100MHz/900MHz	0.03dB/0.33dB
Voltage standing wave ratio (VSWR) @ 100MHz/900MHz	1.06/1.49

TERMINAL ASSIGNMENT

TOP view on relay

IM-B, 1 form A (NO)

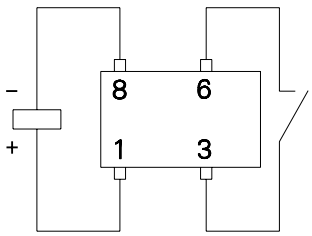

OTHER DATA

Material compliance	EU RoHS/ELV, China RoHS, REACH, Halogen content refer to the Product Compliance Support Center at **www.te.com/customersupport/rohssupportcenter**
Ambient temperature	-40°C to +85°C
Thermal resistance	< 150K/W
Category of environmental protection IEC 61810	RT V - hermetically sealed
Vibration resistance (functional)	20g, 10 to 500Hz
Shock resistance (functional), half sinus 11ms	50g
Shock resistance (destructive), half sinus 0.5ms	500g
Mounting position	any
Weight	max. 0.75g
Resistance to soldering heat SMT	IEC 60068-2-58
Moisture sensitive level, JEDEC J-Std-020D MSL3 related only to SMT relays packed in original dry-packs. Calculated shelf life in sealed bags: 36 months at<40° C and <90% relative humidity (RH). Floor life (out of the bag) at assembly site is 168 hours at ≤ 30º/60% RH.	
Ultrasonic cleaning	Not recommended
Packaging/unit	
THT version	tube/50pcs., box/1000 pcs.
SMT version	reel/1000 pcs., box/1000 or 5000 pcs.
Avoid using the relays under strong magnetic field which will change the parameters of relays such as operate/set voltage and release/reset voltage.	

Downloaded from Arrow.com.

DIMENSIONS (Unit: mm)

THT Standard version

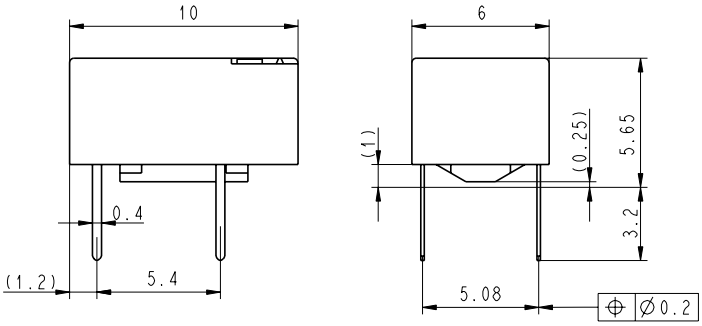

SMT Gull wings version

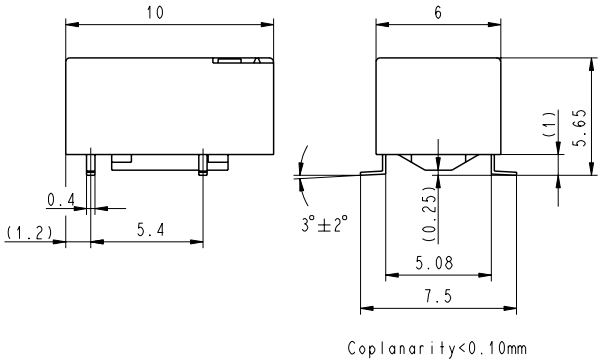

PCB LAYOUT

TOP view on component side of PCB

THT mounting holes

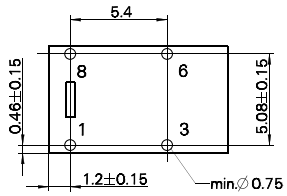

SMT - solder pads

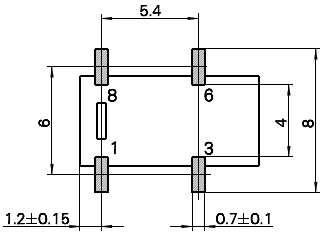

Note:

Customer needs to apply enough solder paste volume / thickness / solder material content to support a stable solder joint

PROCESSING

Recommended soldering conditions

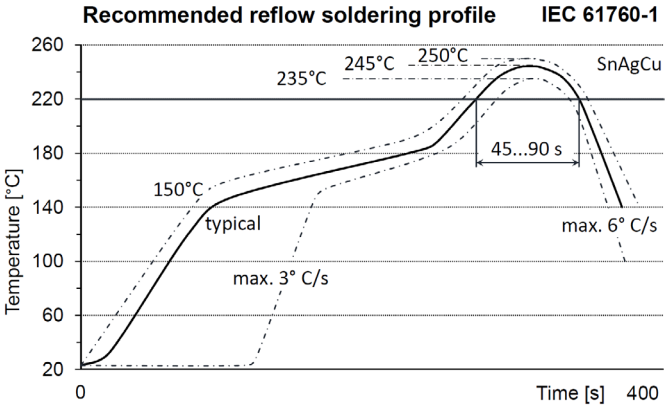

Recommended Vapor Phase Soldering profile

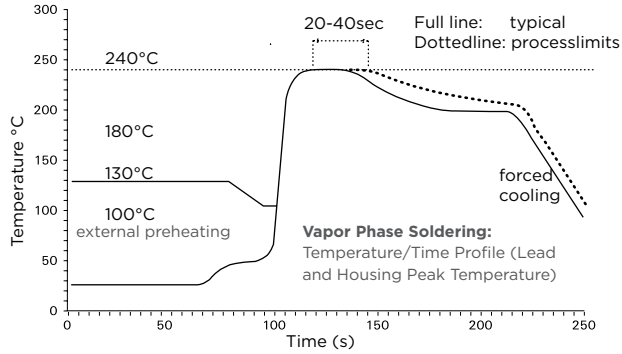

PACKING

Tube for THT version

50 relays per tube, 1000 relays per box

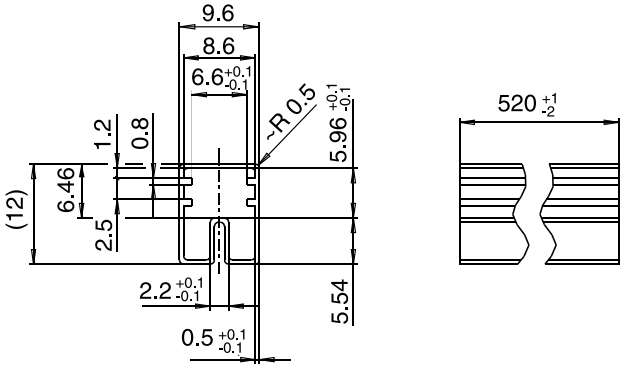

Tape and reel for SMT version

1000 relays per reel, 1000 or 5000 relays per box

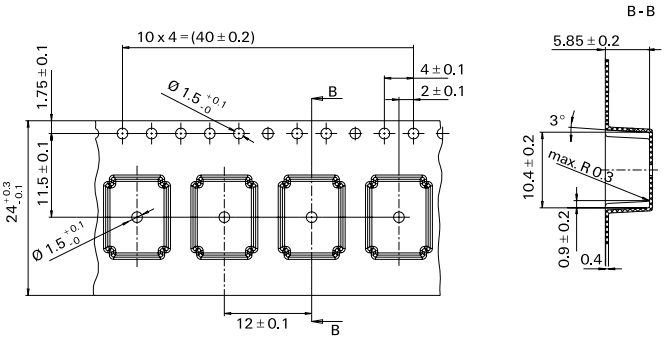

Reel dimensions

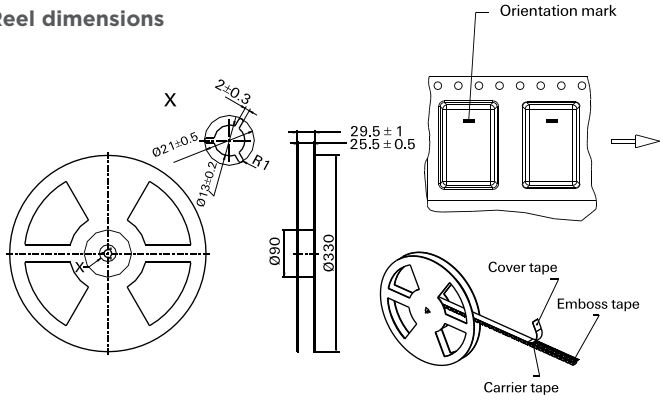

Note: Dimensions are in millimeters over (inches) unless otherwise specified.

Downloaded from Arrow.com.

ORDERING INFORMATION

Part Number					
IM	B	03	C	G	R

Type

IM	Signal Relays IM Series IMB

Contact Arrangement

B	1 form A, 1 NO

Coil

Coil code	Please refer to coil versions table

Performance type

C	High Dielectric Version
I	High Load Version

Terminals

T	THT - standard
G	SMT-gull wing

Packing

S	Tube
R	Reel

Downloaded from Arrow.com.

PART NUMBER LIST

SELECTION TABLE – STANDARD SERIES

Product code	Arrangement	Perf. type	Coil	Coil type	Terminals	Part number
IMB01CGR	1 form A, 1 NO contact	High Dielectric	3VDC	Monostable	SMT gull wing	1462041-1
IMB01CTS					THT standard	1462041-4
IMB02CGR			4.5VDC		SMT gull wing	1462041-2
IMB02CTS					THT standard	1462041-5
IMB03CGR			5VDC		SMT gull wing	1462041-7
IMB03CTS					THT standard	1462041-8
IMB04CGR			6VDC		SMT gull wing	1462041-9
IMB06CGR			12VDC			1462041-3
IMB06CTS					THT standard	1462041-6
IMB07CGR			24VDC		SMT gull wing	1-1462041-3
IMB07CTS					THT standard	1-1462041-4
IMB02IGR		High Load	4.5VDC		SMT gull wing	2-1462041-2
IMB02ITS					THT Standard	2-1462041-3
IMB03IGR			5VDC		SMT gull wing	2-1462041-4
IMB03ITS					THT Standard	2-1462041-5
IMB06IGR			12VDC		SMT gull wing	2-1462041-6
IMB06ITS					THT Standard	2-1462041-7

Note: This list represents the most common types and does not show all variants covered by this datasheet. Other types on request.

Notes:

1. Datasheets and product specification according to IEC 61810-1 and to be used only together with the 'Definitions' section.
2. Datasheets and product data is subject to the terms of the disclaimer and all chapters of the 'Definitions' section, available at http://relays.te.com/definitions.
3. Datasheets, product data, 'Definitions' section, application notes and all specifications are subject to change.

te.com

©2023 TE Connectivity. All Rights Reserved.

Axicom, TE Connectivity, TE connectivity (logo) and Every Connection Counts are trademarks. All other logos, products and/or company names referred to herein might be trademarks of their respective owners.

The information given herein, including drawings, illustrations and schematics which are intended for illustration purposes only, is believed to be reliable. However, TE Connectivity makes no warranties as to its accuracy or completeness and disclaims any liability in connection with its use. TE Connectivity's obligations shall only be as set forth in TE Connectivity's Standard Terms and Conditions of Sale for this product and in no case will TE Connectivity be liable for any incidental, indirect or consequential damages arising out of the sale, resale, use or misuse of the product. Users of TE Connectivity products should make their own evaluation to determine the suitability of each such product for the specific application.

02/23 ED

Downloaded from Arrow.com.