MEMS Infrared Thermal Sensor

MMS701 Series Datasheet

DESCRIPTION

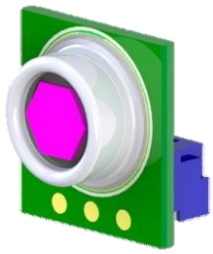

MMS701 is an infrared sensor using MEMS thermopile technology. This sensor can measure surface temperature of objects without touching them by capturing infrared radiation from the objects. The product outputs a digital value of surface temperature of object. I2C is used for the interface. Temperature of the sensor itself can also be measured.

FEATURES

- Low noise level
  - Noise-equivalent temperature difference (NETD): below 0.06°C

- Temperature value is directly available.
  - Digital output of temperature values compensated by ambient temperature. Easy for rapid application engineering.

- Easily mountable with a connector.
  - No need to prepare dedicated board for the sensor.

- MMS701L11A is a low temperature compatible product
  Good temperature accuracy even at in sub-zero temperatures.
  - For reference, +/-2.0°C at -10°C

PRODUCT LINEUP

PRODUCT NAME	Type		Object Temperature Range (P0)
MMS701M11A	Monocular Type	Normal Temperature	-20°C to 150°C
MMS701L11A		Low Temperature Support	-40°C to 80°C

©2025 Mitsumi Electric Co., Ltd. All rights reserved. The contents of this document are subject to change without notice. The details listed here are not a guarantee.

Downloaded from Arrow.com.

INDEX

DESCRIPTION 1
FEATURES 1
PRODUCT LINEUP 1
BLOCK DIAGRAM 3
PIN CONFIGURATION 3
ABSOLUTE MAXIMUM RATINGS 4
RECOMMENDED OPERATING CONDITIONS 4
CHARACTERISTICS 5
Electrical characteristics 5
Operating characteristics 5
SERIAL COMMUNICATION INTERFACE 8
Overview of the communication function 8
Sending and receiving data timing diagram 9
Command list 10
The format of ambient temperature and object temperature 10
PEC (Packet Error Checking) 11
Communication time out 12
Data update period 12
TYPICAL APPLICATION CIRCUIT 13
DIMENSIONS 14
MARKING CONTENTS 15
NOTES 16
ATTENTION 17
ADDITIONAL NOTES 17
PACKING SPECIFICATIONS 19

©2025 Mitsumi Electric Co., Ltd. All rights reserved. The contents of this document are subject to change without notice. The details listed here are not a guarantee.

Downloaded from Arrow.com.

BLOCK DIAGRAM

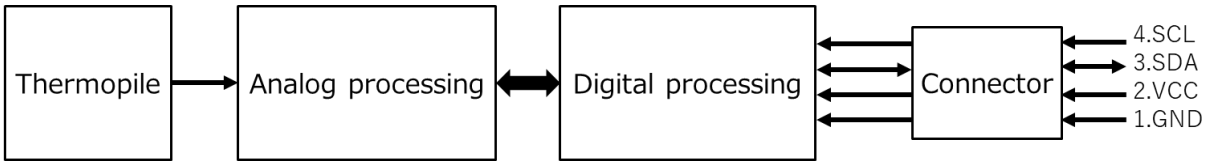

Fig. 1 Block Diagram

PIN CONFIGURATION

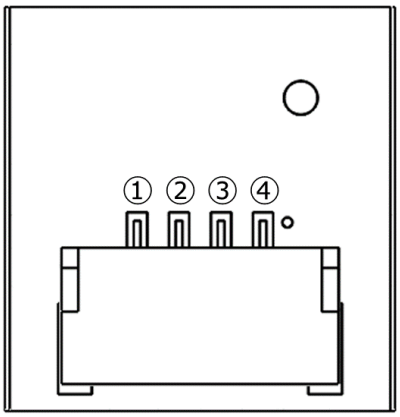

Fig. 2 Pin Configuration（Top View）

Table 1 Pin Table

Pin No.	Pin Name
1	GND
2	VCC
3	SDA
4	SCL

©2025 Mitsumi Electric Co., Ltd. All rights reserved. The contents of this document are subject to change without notice. The details listed here are not a guarantee.

Downloaded from Arrow.com.

ABSOLUTE MAXIMUM RATINGS

(Unless otherwise specified, ambient temperature (Ta) =25°C)

Item	Symbol	Min.	Max.	Unit	Remark
Power-supply Voltage	Vcc	-0.2	6.0	V	
Voltage at I/O	-	-0.3	Vcc	V	SCL, SDA terminal

RECOMMENDED OPERATING CONDITIONS

Item	Symbol	Applicable model	Min.	Typ.	Max.	Unit	Remark
Operating Voltage	Vcc	Both models	4.5	5.0	5.5	V	
Storage Temperature	Ts	MMS701M11A	-40		100	°C	note[1]
		MMS701L11A	-40		80		
Operating Temperature	To	MMS701M11A	-20		100	°C	note[1]
		MMS701L11A	-40		80		
Storage Humidity	Hs	Both models	20		95	%RH	note[1]
Operating Humidity	Ho	Both models	20		95	%RH	note[1]

note[1]: With no icing or condensation

©2025 Mitsumi Electric Co., Ltd. All rights reserved. The contents of this document are subject to change without notice. The details listed here are not a guarantee.

Downloaded from Arrow.com.

CHARACTERISTICS

Electrical characteristics

(Unless otherwise specified, Vcc=5V, ambient temperature (Ta) =25°C)

Item	Symbol	Min.	Typ.	Max.	Unit	Remark
Input Low Voltage	VIL	0.0	-	0.2 x Vcc	V	SCL, SDA Terminal
Input High Voltage	VIH	0.8 x Vcc	-	Vcc	V	SCL, SDA Terminal
Output Low Voltage	VOL	0.0	-	0.2 x Vcc	V	SCL, SDA Terminal IOL = 200uA
Current Consumption	-	-	3.5	7.0	mA	

Operating characteristics

Item		Typ.	Unit	Remark
Field of view	X-axis	25	degree	note[2]
	Y-axis	25	degree	note[2]
Temperature accuracy	Calibration point	±1.5	°C	note[3]
	Test point	±3.0	°C	note[4]
Output of Object temperature range (P0)	MMS701M11A	-20 to 150	°C	Refer to Fig. 4
	MMS701L11A	-40 to 80		Refer to Fig. 5
Output of Ambient temperature range (PTAT)	MMS701M11A	-20 to 100	°C	Refer to Fig. 4
	MMS701L11A	-40 to 80		Refer to Fig. 5

©2025 Mitsumi Electric Co., Ltd. All rights reserved. The contents of this document are subject to change without notice. The details listed here are not a guarantee.

Downloaded from Arrow.com.

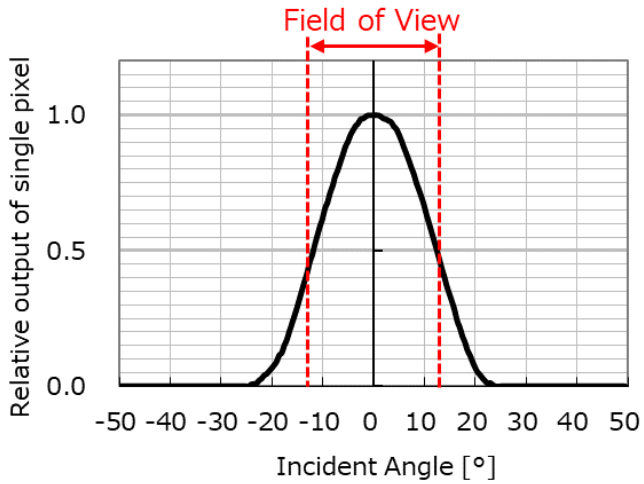

Fig. 3 FOV Characteristic

note[2]: The field of view (FOV) is defined as the angular field of view that provides 50% or more of the sensor's maximum output. Please refer to Fig. 3.

note[3]: Accuracy of the object temperature is guaranteed by our equipment at following conditions:
MMS701M11A: (1)Ta= 25℃, Tx= 25℃ (2)Ta= 25℃, Tx= 45℃ (3)Ta= 45℃, Tx= 45℃
MMS701L11A: (1)Ta= 5℃, Tx= 5℃ (2)Ta= 5℃, Tx= 25℃ (3)Ta= 25℃, Tx= 25℃
where Ta is the ambient temperature and Tx is the object temperature.

note[4]: Accuracy of the object temperature is guaranteed by our equipment at following condition:
MMS701M11A: (4)Ta=45℃, Tx=25℃
MMS701L11A: (4)Ta=25℃, Tx=5℃

©2025 Mitsumi Electric Co., Ltd. All rights reserved. The contents of this document are subject to change without notice. The details listed here are not a guarantee.

Downloaded from Arrow.com.

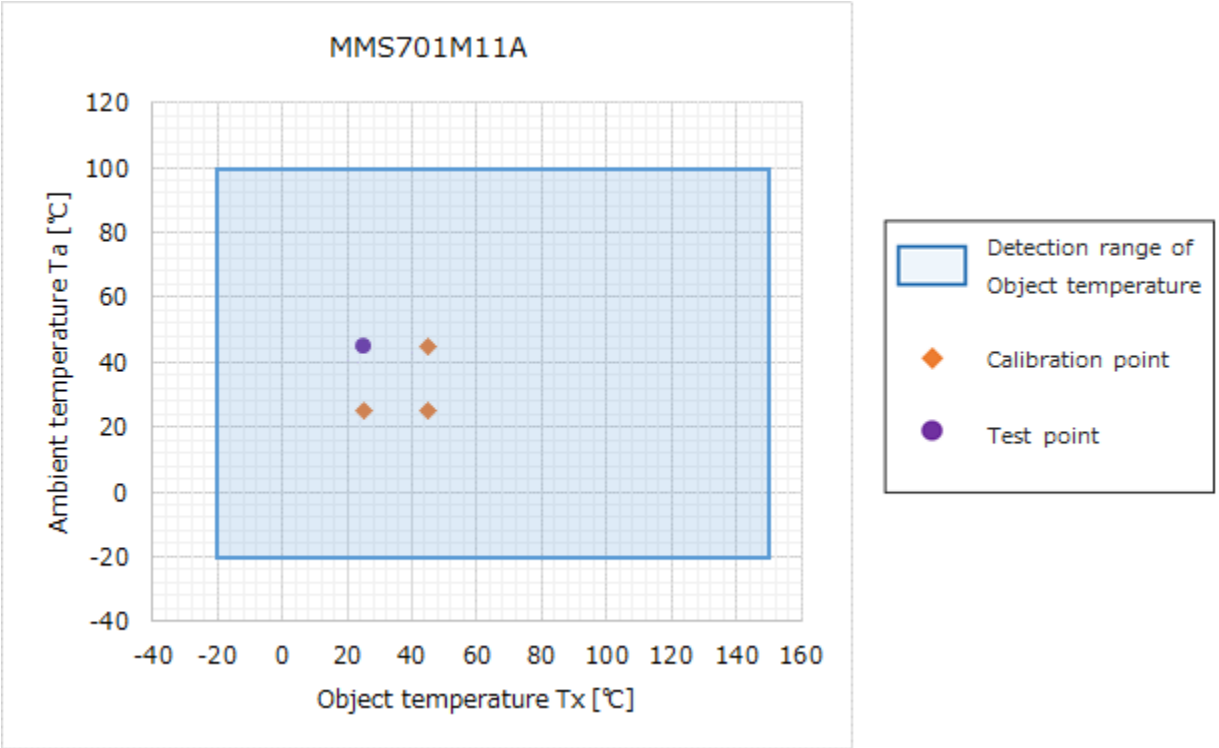

Fig. 4 MMS701M11A Detectable temperature range (for reference)

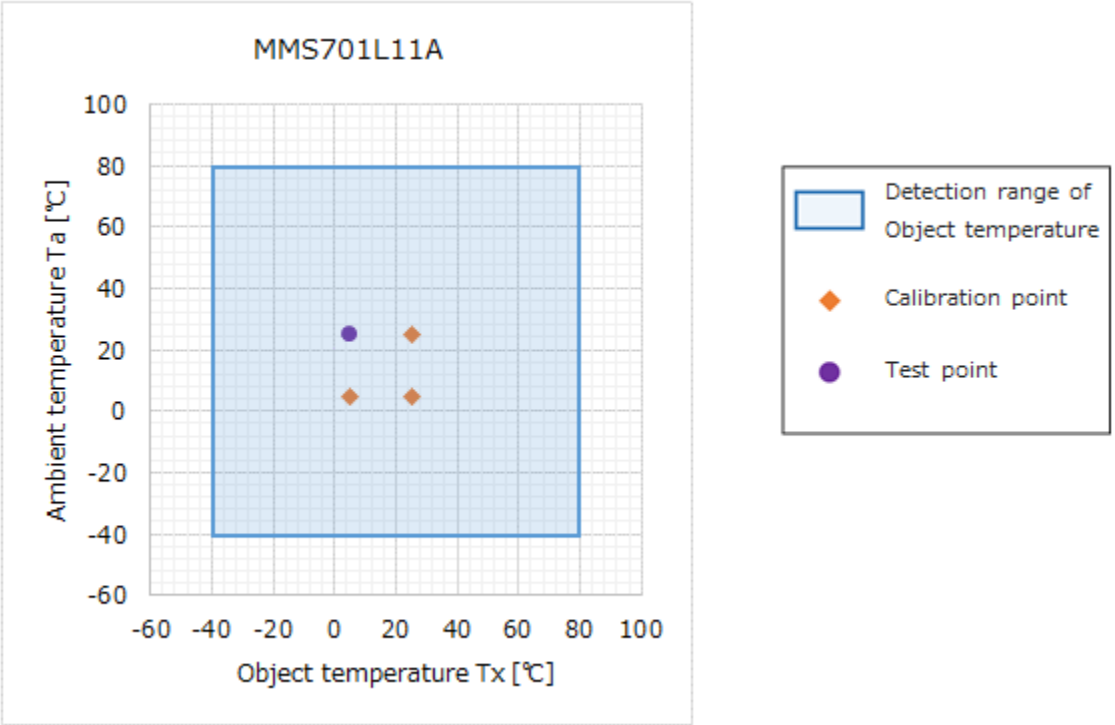

Fig. 5 MMS701L11A Detectable temperature range (for reference)

©2025 Mitsumi Electric Co., Ltd. All rights reserved. The contents of this document are subject to change without notice. The details listed here are not a guarantee.

Downloaded from Arrow.com.

SERIAL COMMUNICATION INTERFACE

Overview of the communication function

The communication specification of this product is based on I2C protocol (SMBus compatible). This product works as a slave and has a 7-bit slave address according to the I2C specification. SCL is the clock input line and SDA is the serial data input/output line.

Item	Description
Communication method	I2C specification (SMBus compatible)
Communication speed	Max. 100kHz
Data length	8 bits
Packet Error Checking (PEC)	CRC-8 polynomial: X^8 + X^2 + X^1 + 1
Output data	Output data corresponding to the object temperature (P0) and output data corresponding to the ambient temperature (PTAT)
Output format	Binary data with Most Significant Bit (MSB) first
Slave Address	0x4D (0b100_1101)

©2025 Mitsumi Electric Co., Ltd. All rights reserved. The contents of this document are subject to change without notice. The details listed here are not a guarantee.

Downloaded from Arrow.com.

Sending and receiving data timing diagram

Ex.) Continuous sensor output (Command: 0x10)

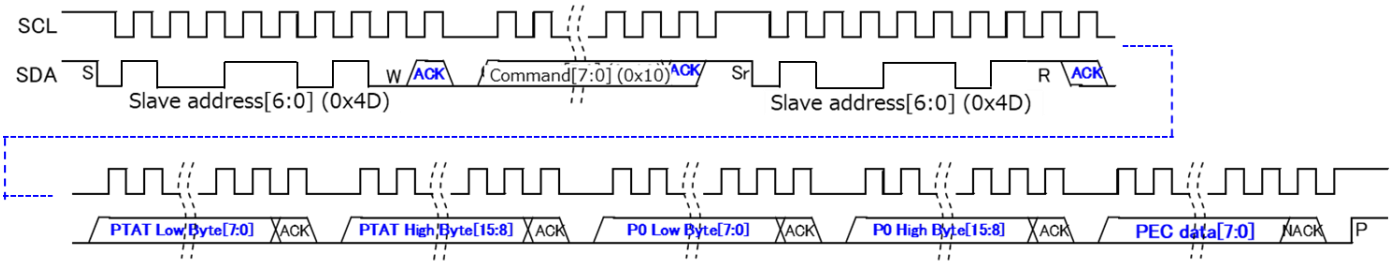

Black: master to slave、Blue: slave to master

Ex.) Individual sensor output (Command: 0x12)

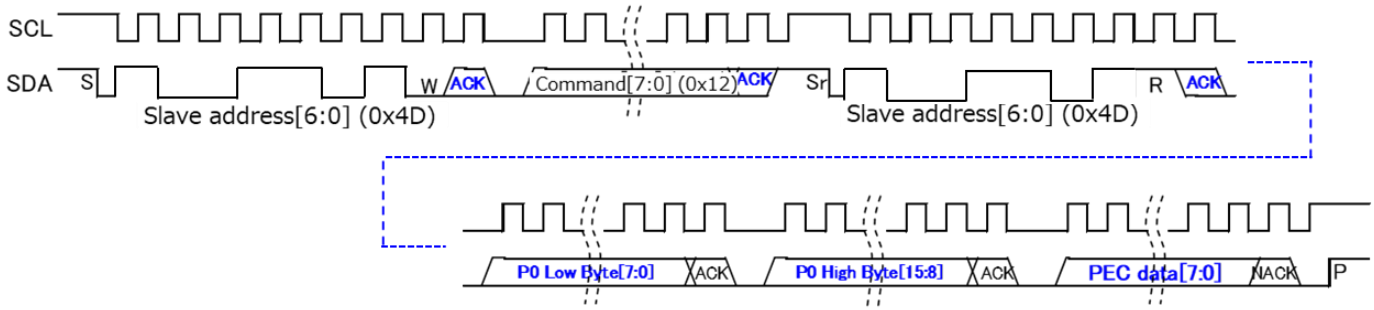

Black: master to slave、Blue: slave to master

Description of the symbols

"S"	:Start Condition
"Address"	:Slave address of this product
"W"	:Write(0)
"R"	:Read(1)
"ACK"	:Acknowledge(0)
"NACK"	:No acknowledge(1)
"Command"	:Refer to section "Command list"
"Sr"	:Repeat Start Condition
"PEC"	:Packet Error Code
"P"	:Stop Condition

When this product receives Stop Condition, both SCL and SDA terminals become high impedance, and this product waits for commands from the master.

©2025 Mitsumi Electric Co., Ltd. All rights reserved. The contents of this document are subject to change without notice. The details listed here are not a guarantee.

Downloaded from Arrow.com.

Command list

List of commands for reading output data

Command	Function
0x10	Output the ambient temperature (PTAT) and the object temperature (P0) only once, in that order
0x11	Output the data of the ambient temperature (PTAT) only once
0x12	Output the data of the object temperature (P0) only once
0x00 0x01 0x04 0x06 - 0x0F 0x13 - 0xFF	Do not issue these commands. note[5]

note[5]: Only used by the manufacturer. If these commands are issued, the internal state of the product will change, and therefore operation is not guaranteed.

The format of ambient temperature and object temperature

Output of ambient temperature and object temperature are both 10 times the value of the detected temperature [°C] as 16-bit binary data.

<table>
<tr><td>Command Sequence Diagram</td><td>
<table>
<tr><td>Low Byte Data
D7→D0</td><td>ACK</td><td>High Byte Data
D15→D8</td><td>ACK</td></tr>
</table>
</td></tr>
<tr><td>Data format of ambient temperature and object temperature</td><td>
<table>
<tr><td colspan="8">High Byte</td><td colspan="8">Low Byte</td></tr>
<tr><td>D15</td><td>D14</td><td>D13</td><td>D12</td><td>D11</td><td>D10</td><td>D9</td><td>D8</td><td>D7</td><td>D6</td><td>D5</td><td>D4</td><td>D3</td><td>D2</td><td>D1</td><td>D0</td></tr>
</table>
Note: Since data is output from the MSB, the High Byte is output in the order D15 to D8, and Low Byte in the order D7 to D0.
</td></tr>
</table>

©2025 Mitsumi Electric Co., Ltd. All rights reserved. The contents of this document are subject to change without notice. The details listed here are not a guarantee.

Downloaded from Arrow.com.

Sign

Bit D15 of ambient temperature and object temperature is a sign bit. A negative number is expressed by 2's complement.
Ex.)
In the case where D15 is "0": 250 (High Byte data = 0x00, Low Byte data = 0xFA)
In the case where D15 is "1": -250 (High Byte data = 0xFF, Low Byte data = 0x06)

Example of output data

The detected temperature [°C] is obtained by converting the 16-bit binary output data into decimal and dividing by 10.
Ex.)
If the output data is 0x0131, the detected temperature is 305 / 10 = 30.5[°C].

When NACK is received

When this product receives NACK from a master, it is in the same state as if it had received Stop Condition.

PEC (Packet Error Checking)

This product supports Packet Error Checking (PEC) based on SMBus specification. PEC data is transmitted as the final byte of transmitted data. PEC byte is calculated based on CRC-8 method with $X^8+X^2+X^1+1$ polynomial. An example of the PEC byte calculation is shown below.

Target data

- Slave Address + W (8bits)
- Command (8bits)
- Slave Address + R (8bits)
- Low Byte of PTAT (8bits)
- High Byte of PTAT (8bits)
- Low Byte of P0 (8bits)
- High Byte of P0 (8bits)

Example of calculating PEC value (Continuous sensor output)

(1) Calculate CRC-8 of (Slave Address + W).
(2) Take an exclusive OR (XOR) of (1) and Command.
(3) Calculate CRC-8 of the result of (2).
(4) Take an XOR of (3) and (Slave Address + R).
(5) Calculate CRC-8 of the result of (4).
(6) Take an XOR of (5) and (Low Byte of PTAT).
(7) Calculate CRC-8 of the result of (6).
(8) Take an XOR of (7) and (High Byte of PTAT).
(9) Calculate CRC-8 of the result of (8).
(10) Take an XOR of (9) and (Low Byte of P0).
(11) Calculate CRC-8 of the result of (10).
(12) Take an XOR of (11) and (High Byte of P0).
(13) Calculate the result of (12) by CRC-8. The result is used as the PEC value.

©2025 Mitsumi Electric Co., Ltd. All rights reserved. The contents of this document are subject to change without notice. The details listed here are not a guarantee.

Downloaded from Arrow.com.

Communication time out

If SCL or SDA Low input continues for min. 22.8 ms and max. 70 ms, a communication timeout occurs. The process is disabled and this product enters a state waiting for a new command to be received.

Data update period

The maximum data processing time of this sensor is 100 ms. Data processing is stopped during communication. For this reason, please take more than 100ms between the end of communication and the start of the next communication.
In order to more stabilize sensor output, we recommend setting data update period to 200ms or more.

Example of output data (Figure below)

- If a data request (1) is made **after** data update (2), the updated data "Fix data (2)" is output.
- If a data request (2) is made **during** data update (4), the previous data "Fix data (3)" is output.

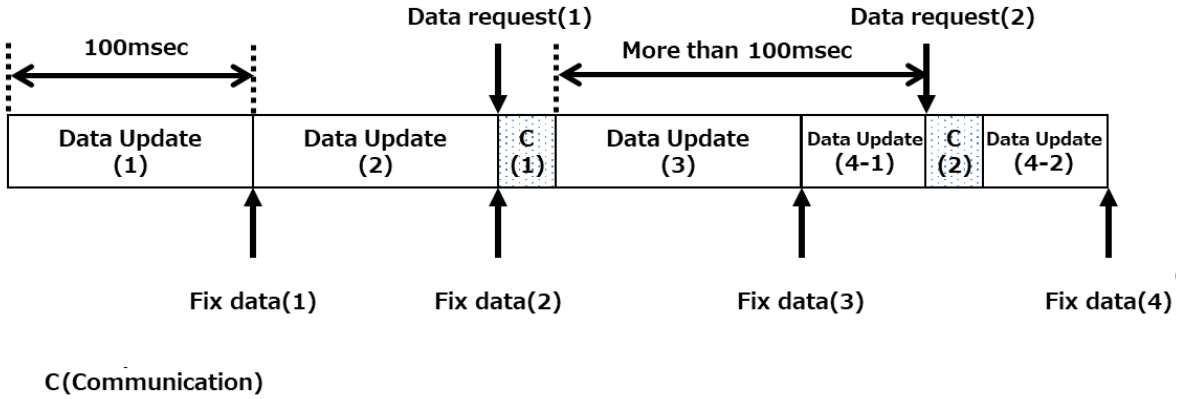

©2025 Mitsumi Electric Co., Ltd. All rights reserved. The contents of this document are subject to change without notice. The details listed here are not a guarantee.

Downloaded from Arrow.com.

TYPICAL APPLICATION CIRCUIT

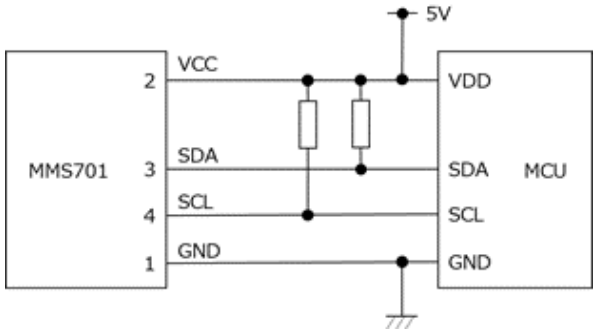

Fig. 6 Case of connecting to MCU operating at 5V

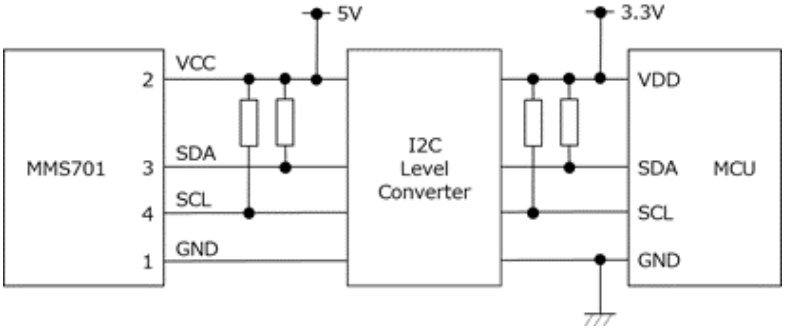

Fig. 7 Case of connecting to MCU operating at 3.3V via I2C level converter

Internal circuits of the I2C terminals (SCL and SDA) are shown below. A pull-up resistor must be connected to the SCL and SDA terminals respectively. Depending on the user's environment, in most cases the pull-up resistor is about 3 kΩ to 10 kΩ. The pull-up voltage should be the same as or lower than VCC. If the pull-up voltage is higher than VCC, the circuit may be damaged.

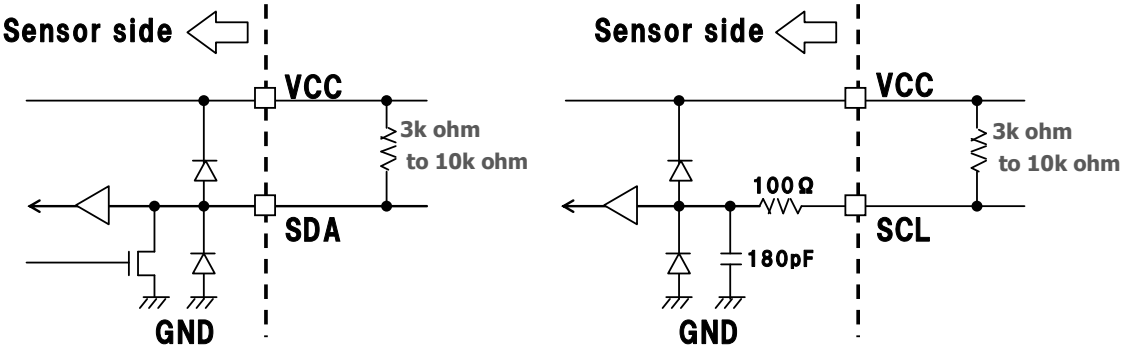

note[6]: The SCL terminal is connected to GND with a 180 pF capacitor. Please check that there are no problems with data transmission before use.

©2025 Mitsumi Electric Co., Ltd. All rights reserved. The contents of this document are subject to change without notice. The details listed here are not a guarantee.

Downloaded from Arrow.com.

DIMENSIONS

UNIT	mm

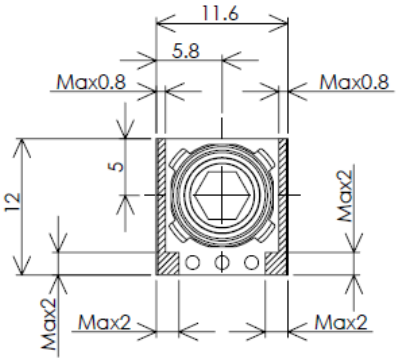

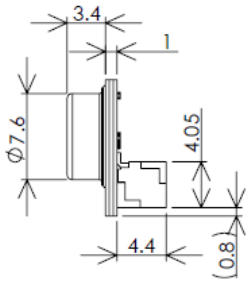

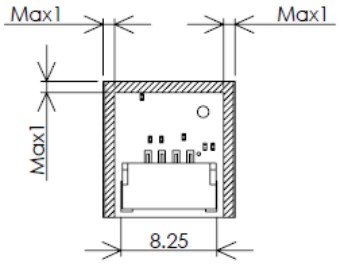

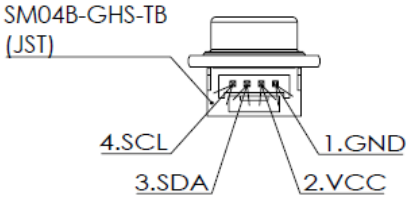

Hatched areas are holdable areas. Only insulating materials should be used for holding parts, no metal be used.

©2025 Mitsumi Electric Co., Ltd. All rights reserved. The contents of this document are subject to change without notice. The details listed here are not a guarantee.

Downloaded from Arrow.com.

MARKING CONTENTS

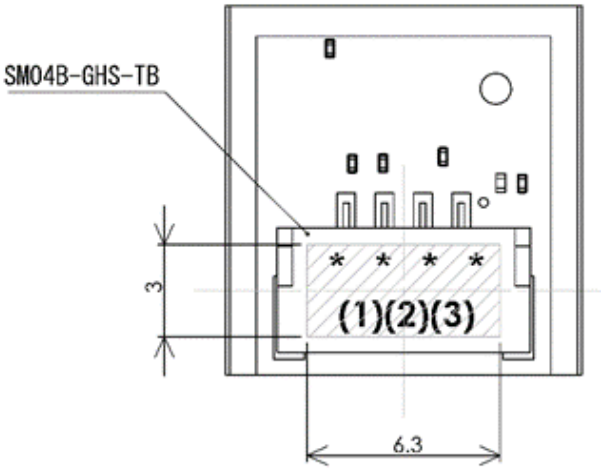

Upper

		Rank	Marking
****	MMS701	Low temperature	L11A
		Middle temperature	M11A

Lower

(1)	Production year (Last digit of production year)			
(2)	Production month			
	Month	Marking	Month	Marking
	JAN	1	JUL	7
	FEB	2	AUG	8
	MAR	3	SEP	9
	APR	4	OCT	J
	MAY	5	NOV	K
	JUN	6	DEC	L
(3)	Production day			
	Day	Marking	Day	Marking
	1	1	16	G
	2	2	17	H
	3	3	18	J
	4	4	19	K
	5	5	20	L
	6	6	21	M
	7	7	22	N
	8	8	23	P
	9	9	24	R
	10	A	25	S
	11	B	26	T
	12	C	27	U
	13	D	28	V
	14	E	29	W
	15	F	30	X
			31	Y

©2025 Mitsumi Electric Co., Ltd. All rights reserved. The contents of this document are subject to change without notice. The details listed here are not a guarantee.

Downloaded from Arrow.com.

NOTES

Safety Precautions

- Though Mitsumi Electric Co., Ltd. (hereinafter referred to as "Mitsumi") works continually to improve our product's quality and reliability, semiconductor products may generally malfunction or fail. Customers are responsible for complying with safety standards and for providing adequate designs and safeguards for their hardware, software and systems which minimize risk and avoid situations in which a malfunction or failure of this product could cause loss of human life, bodily injury, or damage to property, including data loss or corruption. Before customers use this product, create designs including this product, or incorporate this product into their own applications, customers must also refer to and comply with (a) the latest versions or all of our relevant information, including without limitation, product specifications, data sheets and application notes for this product and (b) the user's manual, handling instructions or all relevant information for any products which is to be used, or combined with this products. Customers are solely responsible for all aspects of their own product design or applications, including but not limited to (a) determining the appropriateness of the use of this product in such design or applications; (b) evaluating and determining the applicability of any information contained in this document, or in charts, diagrams, programs, algorithms, sample application circuits, or any other referenced documents; and (c) validating all operating parameters for such designs and applications. Mitsumi assumes no liability for customers' product design or applications.
- This product is intended for applying to computers, OA units, communication units, instrumentation units, machine tools, industrial robots, AV units, household electrical appliances, and other general electronic units.
- This product is not designed as a component of equipment or devices that require a high degree of reliability, may affect the life or body, or could damage the property (space systems, submarine repeaters, nuclear power controllers, infrastructure controllers, medical equipment, military devices, units related to the control and safety of transport equipment (automobiles, trains, aircraft, etc.), traffic signaling equipment, disaster / crime prevention units, or the like). In the case where this product is used in these applications, Mitsumi does not bear any responsibility. If the product is used as a component of the above equipment or devices, Mitsumi shall not be liable for any damage caused thereby. It is the customer's responsibility to carry out the necessary safety design for the customer's hardware, software and systems.
- Before using this product, even when it is not used for the applications written previous paragraph, notify and present us beforehand if special care and attention are needed for its application, intended purpose, environment of usage, risk, and the design or inspection specification corresponding to them.
- If any damage to our customer is objectively identified to be caused by the defect of this product, Mitsumi is responsible for it. In this case, Mitsumi is liable for the cost limited to the delivery price of this product.

Application considerations during actual circuit design

- The outline of parameters described herein has been chosen as an explanation of the standard parameters and performance of the product. When you actually plan to use the product, please ensure that the outside conditions are reflected in the actual circuit and assembling designs.
- Before using this product, please evaluate and confirm the actual application with this product mounted and embedded.
- To investigate the influence by applied transient load or external noise, It is necessary to evaluate and confirm them with mounting this product to the actual application.
- Any usage above the maximum rating may destroy this product or shorten the lifetime. Be sure to use this product under the maximum rating.

Precautions for Foreign Exchange and Foreign Trade Control Act

- If you export or take products and technologies in this document which are subject to security trade control based on the Foreign Exchange and Foreign Trade Act to overseas from Japan, permission of the Japanese government is required.

Prohibitions for Industrial Property Rights

- Since this document contains the contents related to our copyright and know-how, you are requested not to use this document for any purpose other than the application of this product.
- If a use of this product causes a dispute related to the industrial property rights of a third party, Mitsumi does not bear any responsibility for any disputes except those which arise directly from the manufacturing and manufacturing method of our products.

©2025 Mitsumi Electric Co., Ltd. All rights reserved. The contents of this document are subject to change without notice. The details listed here are not a guarantee.

Downloaded from Arrow.com.

Precautions for Product Liability Act

- Mitsumi does not bear any responsibility for any consequence resulting from any wrong or improper use of this product and other factors.

Others

- Any part of the contents contained herein must not be reprinted or reproduced without our prior permission.
- In case of any question arises out of the description in this specification, it shall be settled by the consultation between both parties promptly.
- Mitsumi assures only the products in wafer if they are delivered in wafer state. Mitsumi does not bear any responsibility for the defect which occurs during or after assembly process.

ATTENTION

- This product is designed and manufactured with the intention of normal use in general electronics. No special circumstance as described below is considered for the use of it when it is designed. With this reason, any use and storage under the circumstances below may affect the performance of this product. Prior confirmation of performance and reliability is requested to customers.
  Environment with strong static electricity or electromagnetic wave
  Environment with high temperature or high humidity where dew condensation may occur
- This product is not designed to withstand radioactivity, and must avoid using in a radioactive environment.
- This specification is written in Japanese and English. The Japanese text is the original and the English text is for reference purposes. If any question arises, Japanese text shall prevail.

ADDITIONAL NOTES

- Storage condition
  Recommended storage condition is as follows:
  Temperature: 5 to 30℃
  Humidity: 40 to 70%RH

- Do not use, transport or store this product in the following environments:
  - Environments with water, oil, chemicals or solvents
  - Outdoor
  - Locations subject to direct sunlight or ultra-violet rays
  - Environments with corrosive gases (chlorine, sulfide gas, ammonia gas, etc.)
  - Locations where icing or condensation may occur
  - Environments with extreme temperature changes
  - Locations of high impact shock and vibration (Including dropping or throwing down during transportation, using products that have been dropped, ultrasonic cleaning, pushing or prodding with hard objects, etc.)
  - Dusty environments

- Please do not use the sensor in environments where dust, water, oil, solvents, cleaning solution or other contaminants are likely to adhere to the sensor cover. Otherwise, the temperature may not be measured correctly.
- Please do not touch the sensor cover with bare hands.
- Please do not apply an electrical load exceeding the absolute maximum rating, even momentarily. This may cause damage to the circuit. Please install protection circuits as necessary to ensure that the absolute maximum ratings are not exceeded.
- This product is a precision instrument. Please do not drop or give excessive force or shock to the product, as the product will malfunction or change its characteristics.
- Please keep the static electricity level less than 100V in the product handling area.
- Please connect this product with the power supply switched OFF.
- Please make sure correct wiring connection when attaching this product.
- Please fix this product so that the optical axis does not shift.

©2025 Mitsumi Electric Co., Ltd. All rights reserved. The contents of this document are subject to change without notice. The details listed here are not a guarantee.

Downloaded from Arrow.com.

- Please fix this product so that it will not be deformed. Please ensure that the resist on the substrate is not peeled off.
- Please use the specified connector (GHR-04V). Please avoid soldering directly to the connector pins.
- If the parts of this product are damaged, they may fall. Please take measures to prevent falling off.
- Please do not reuse this product from discarded mounted applications.

©2025 Mitsumi Electric Co., Ltd. All rights reserved. The contents of this document are subject to change without notice. The details listed here are not a guarantee.

Downloaded from Arrow.com.

PACKING SPECIFICATIONS

QUANTITY

· INNER BOX PACKING 480pcs / BOX

THE QUANTITY IS FILLED IN THE PACKING SLIP.

PACKING SPECIFICATIONS

· INNER BOX STORAGE SPECIFICATION

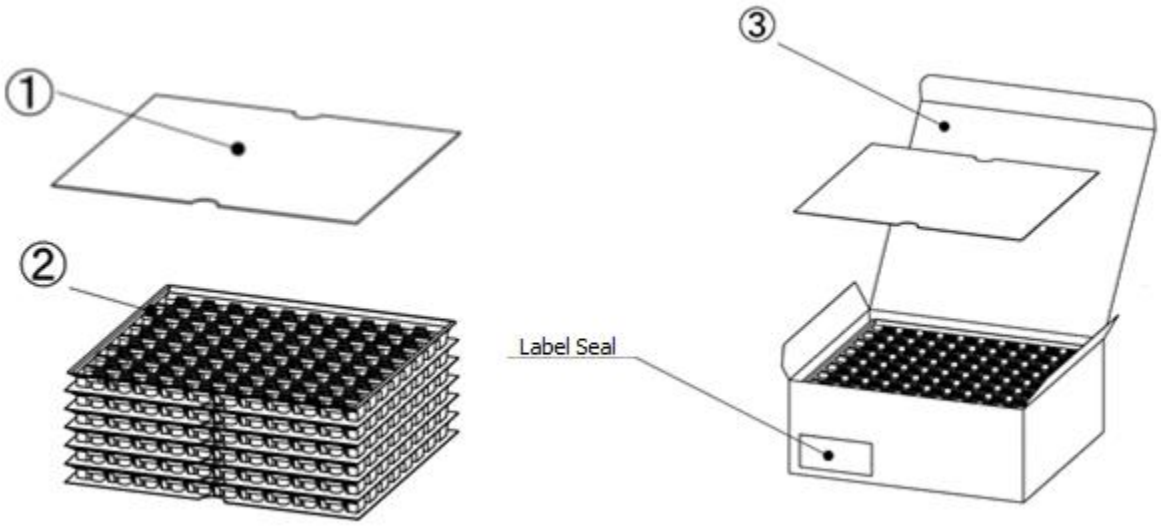

No.	Qty.	Name	Material
1	7	Sheet	Coated board paper
2	6	Tray 80pcs	Polystyrene ※antistatic resin
3	1	Box 480pcs	Coated board paper

LABEL SEAL

©2025 Mitsumi Electric Co., Ltd. All rights reserved. The contents of this document are subject to change without notice. The details listed here are not a guarantee.

Downloaded from Arrow.com.

・ INNER BOX / TRAY DIMENSIONS

Unit: mm

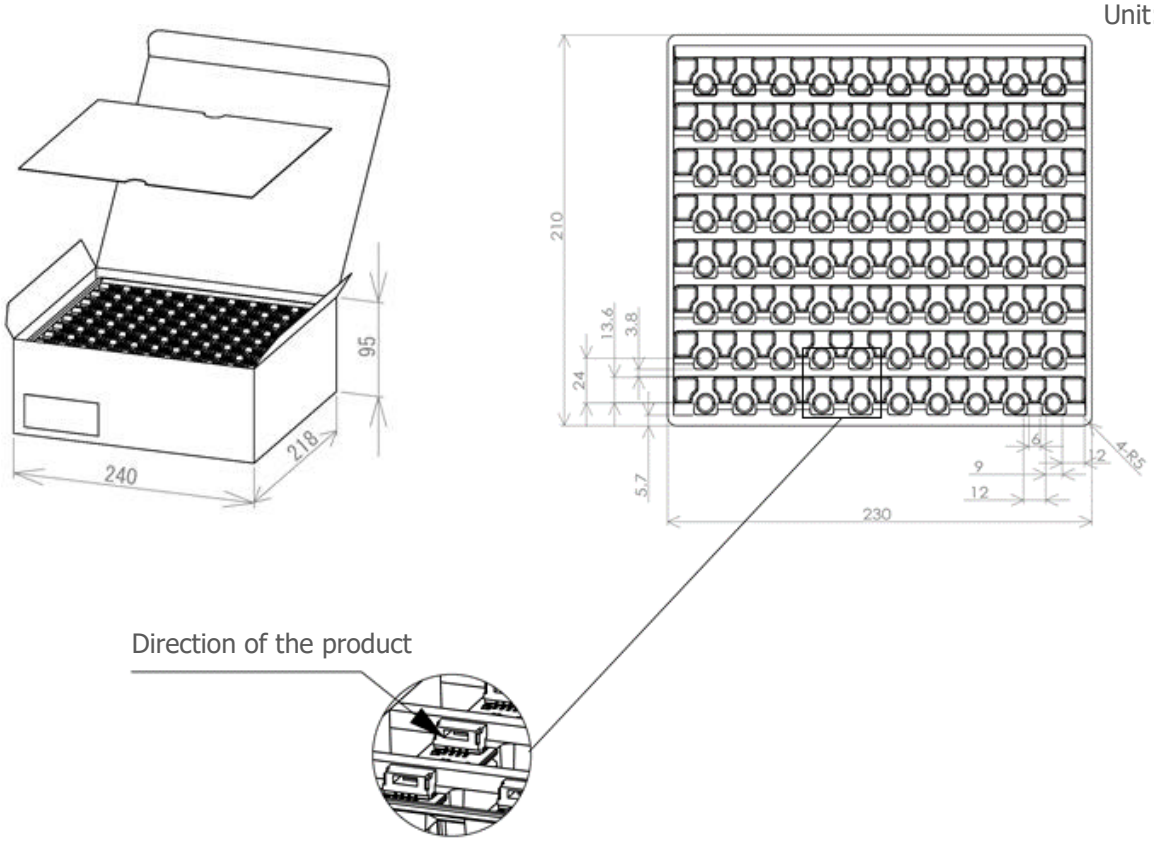

©2025 Mitsumi Electric Co., Ltd. All rights reserved. The contents of this document are subject to change without notice. The details listed here are not a guarantee.

Downloaded from Arrow.com.

・ PACKING SLIP SPECIFICATION

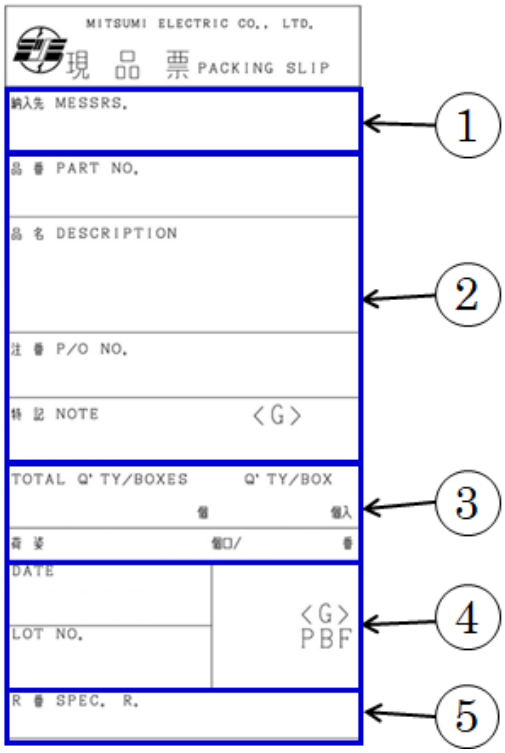

① CUSTOMER NAME
② CUSTOMER'S MODEL NAME
MITSUMI MODEL NAME
③ PACKING Q'TY (PACK/CARTON)
④ QC STAMP(SHIPMENT DATE)
※This is pass-stamp about shipment inspection.
"G mark" meaning is RoHS-compliant.
⑤ MITSUMI DRAWING NUMBER

©2025 Mitsumi Electric Co., Ltd. All rights reserved. The contents of this document are subject to change without notice. The details listed here are not a guarantee.

Downloaded from Arrow.com.

MITSUMI ELECTRIC CO., LTD.

Strategy Engineering Department Semiconductor Business Division

Tel: +81-46-230-3470 / https://product.minebeamitsumi.com/en/contact/

Notes:
Any products mentioned this datasheet are subject to any modification in their appearance and others for improvements without prior notification. The details listed here are not a guarantee of the individual products at the time of ordering. When using the products, you will be asked to check their specifications.

©2025 Mitsumi Electric Co., Ltd. All rights reserved. The contents of this document are subject to change without notice. The details listed here are not a guarantee.

Downloaded from Arrow.com.

Disclaimers (Handling Precautions)

1. All the information described herein (product data, specifications, figures, tables, programs, algorithms and application circuit examples, etc.) is current as of publishing date of this document and is subject to change without notice.
2. The circuit examples and the usages described herein are for reference only, and do not guarantee the success of any specific mass-production design.
   MITSUMI ELECTRIC CO., LTD. is not liable for any losses, damages, claims or demands caused by the reasons other than the products described herein (hereinafter "the products") or infringement of third-party intellectual property right and any other right due to the use of the information described herein.
3. MITSUMI ELECTRIC CO., LTD. is not liable for any losses, damages, claims or demands caused by the incorrect information described herein.
4. Be careful to use the products within their ranges described herein. Pay special attention for use to the absolute maximum ratings, operation voltage range and electrical characteristics, etc.
   MITSUMI ELECTRIC CO., LTD. is not liable for any losses, damages, claims or demands caused by failures and / or accidents, etc. due to the use of the products outside their specified ranges.
5. Before using the products, confirm their applications, and the laws and regulations of the region or country where they are used and verify suitability, safety and other factors for the intended use.
6. When exporting the products, comply with the Foreign Exchange and Foreign Trade Act and all other export-related laws, and follow the required procedures.
7. The products are strictly prohibited from using, providing or exporting for the purposes of the development of weapons of mass destruction or military use. MITSUMI ELECTRIC CO., LTD. is not liable for any losses, damages, claims or demands caused by any provision or export to the person or entity who intends to develop, manufacture, use or store nuclear, biological or chemical weapons or missiles, or use any other military purposes.
8. The products are not designed to be used as part of any device or equipment that may affect the human body, human life, or assets (such as medical equipment, disaster prevention systems, security systems, combustion control systems, infrastructure control systems, vehicle equipment, traffic systems, in-vehicle equipment, aviation equipment, aerospace equipment, and nuclear-related equipment), excluding when specified for in-vehicle use or other uses by MITSUMI ELECTRIC CO., LTD. Do not apply the products to the above listed devices and equipment.
   MITSUMI ELECTRIC CO., LTD. is not liable for any losses, damages, claims or demands caused by unauthorized or unspecified use of the products.
9. In general, semiconductor products may fail or malfunction with some probability. The user of the products should therefore take responsibility to give thorough consideration to safety design including redundancy, fire spread prevention measures, and malfunction prevention to prevent accidents causing injury or death, fires and social damage, etc. that may ensue from the products' failure or malfunction.
   The entire system in which the products are used must be sufficiently evaluated and judged whether the products are allowed to apply for the system on customer's own responsibility.
10. The products are not designed to be radiation-proof. The necessary radiation measures should be taken in the product design by the customer depending on the intended use.
11. The products do not affect human health under normal use. However, they contain chemical substances and heavy metals and should therefore not be put in the mouth. The fracture surfaces of wafers and chips may be sharp. Be careful when handling these with the bare hands to prevent injuries, etc.
12. When disposing of the products, comply with the laws and ordinances of the country or region where they are used.
13. The information described herein contains copyright information and know-how of MITSUMI ELECTRIC CO., LTD. The information described herein does not convey any license under any intellectual property rights or any other rights belonging to MITSUMI ELECTRIC CO., LTD. or a third party. Reproduction or copying of the information from this document or any part of this document described herein for the purpose of disclosing it to a third-party is strictly prohibited without the express permission of MITSUMI ELECTRIC CO., LTD.
14. For more details on the information described herein or any other questions, please contact MITSUMI ELECTRIC CO., LTD.'s sales representative.
15. This Disclaimers have been delivered in a text using the Japanese language, which text, despite any translations into the English language and the Chinese language, shall be controlling.

Downloaded from Arrow.com.