

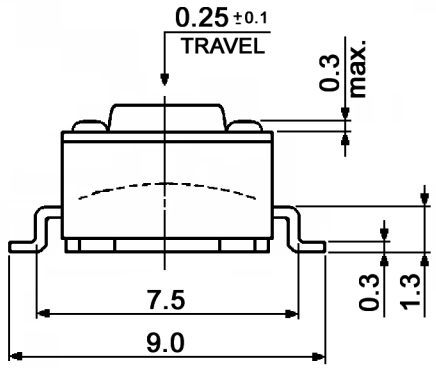

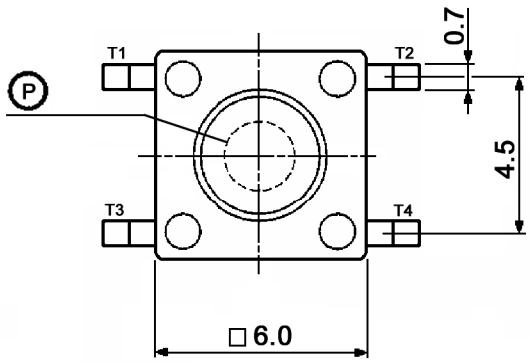

Ⓟ Recommend operating area ⌀2.0mm

P.C.B. LAYOUT

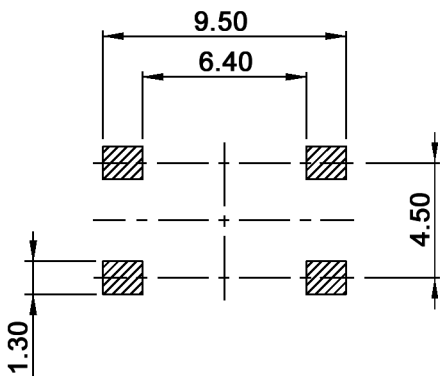

CIRCUIT DIAGRAM

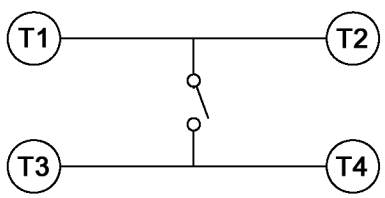

Compliance: RohS III (2015/863/EU), halogen-free according to IEC 61249-2-21

Tolerances: up to 10: ±0.2mm above 10-50: ±0.3mm			Date	Name
			04/06	dr
Material	01/25	dr		
Storage temperature	12/23	dr		
Renamed	07/15	dr		
Renamed	06/15	dr		
Operating temperature	07/08	dr		
Packaging	06/06	dr		
Modifications	Date	Name		

TSS 62 x

knitter-switch

30 08 40

Page 1/3

Downloaded from Arrow.com.

Specifications:

Contact rating:	50mA, 12V DC
Contact resistance:	100mOhm max.
Insulation resistance:	100MOhm min. at 500V DC for 1 minute
Dielectric strength:	250V AC (50/60Hz) for 1 minute
Operating temperature:	-40°C to +85°C
Storage conditions:	-40°C to +85°C, 45 to 85 % rH
Material:	Terminal: brass, silver plated
	Contact: PBS, silver plated
	Case: PA9T, black
	Cover: SUS, natural
	Stem: PA46

Soldering conditions:

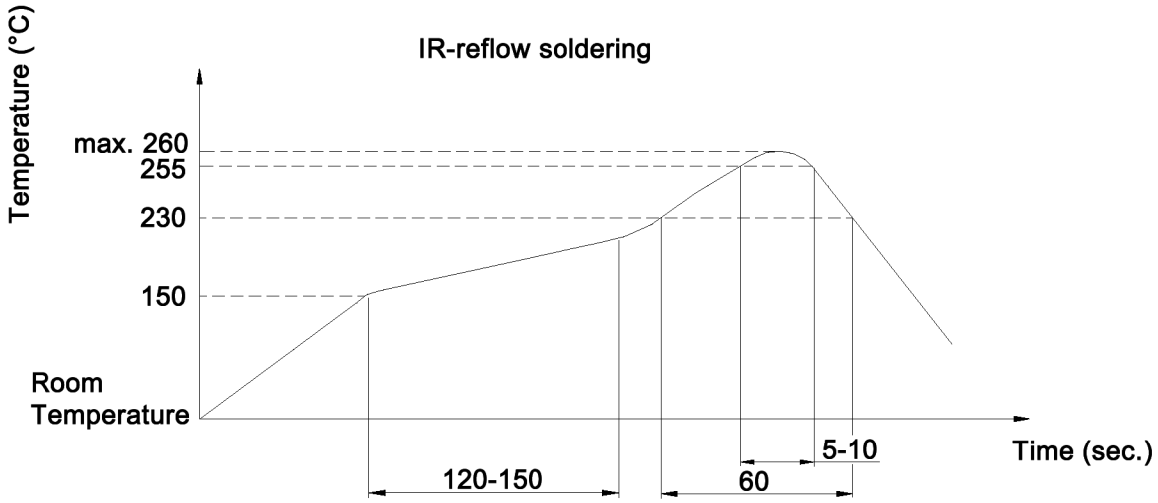

x	Operating force	Mechanical life	Stem color
K	1.0 +/-0.3 N	150 000 cycles	black
N	1.6 +/-0.5 N	150 000 cycles	brown
R	2.5 +/-0.7 N	150 000 cycles	red
S	3.2 +/-0.7 N	100 000 cycles	salmon
Y	5.2 +/-1.3 N	50 000 cycles	yellow

Compliance: RohS III (2015/863/EU), halogen-free according to IEC 61249-2-21

Tolerances: up to 10: ±0.2mm above 10-50: ±0.3mm			Date	Name
			04/06	dr
Material	01/25	dr		
Storage temperature	12/23	dr		
Renamed	07/15	dr		
Renamed	06/15	dr		
Operating temperature	07/08	dr		
Packaging	06/06	dr		
Modifications	Date	Name		

TSS 62 x

knitter-switch

30 08 40

Page 2/3

Downloaded from Arrow.com.

Packaging:

REEL

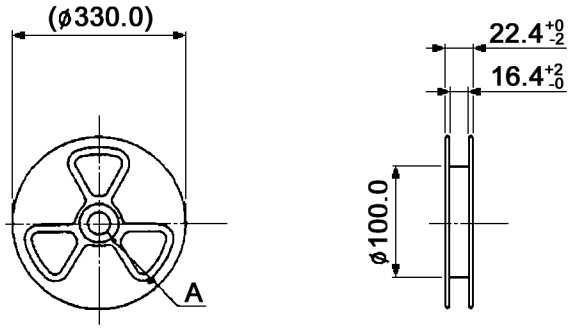

DETAIL A

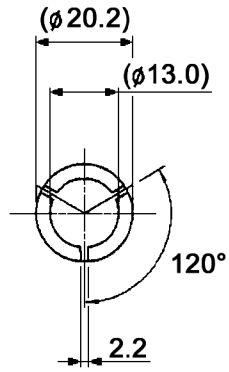

CARRIER TAPE

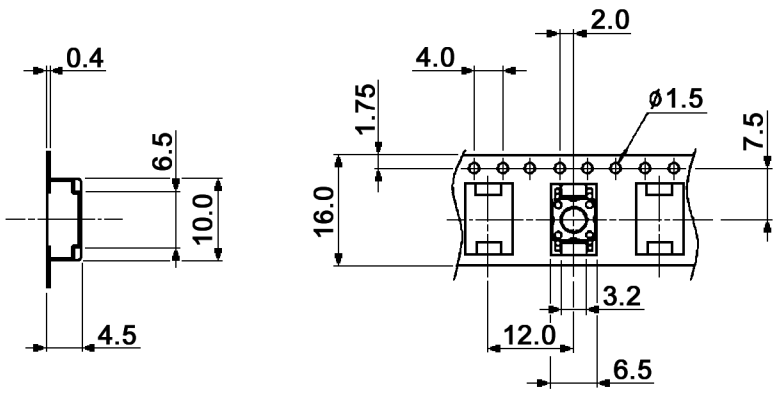

COVER TAPE

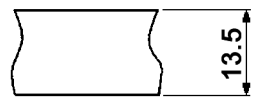

Packaging unit: 900 pcs. / reel

Compliance: RohS III (2015/863/EU), halogen-free according to IEC 61249-2-21

Tolerances: up to 10: ±0.2mm above 10-50: ±0.3mm			Date	Name	TSS 62 x	
			04/06	dr		
Material	01/25	dr				
Storage temperature	12/23	dr				
Renamed	07/15	dr				
Renamed	06/15	dr	knitter-switch		30 08 40	Page
Operating temperature	07/08	dr				3/3
Packaging	06/06	dr				
Modifications	Date	Name				

Downloaded from Arrow.com.