ITEM NO.	PART NUMBER	DESCRIPTION	QTY.	COMPONENT NOTES
1	50-00680	Connector, 4 pin M8 A-code plug, 8x19.2 mm, gold plated, molding style, solder cup, IP67, shielded	1	
2	30-01579	Wire, 4C TS, 24 AWG, UL20387, 300V, 105C, 60C oil, UV, 5.5 mm, shielded, VW-1, PVC, 80A, black	1	
3	24-00378	Overmold, M8 plug and jack, 180°	1	PVC, black
4	Heat Shrink	Heat shrink, black	1	Covers drain
5	Heat Shrink	Heat shrink, black	1	Covers end of jacket

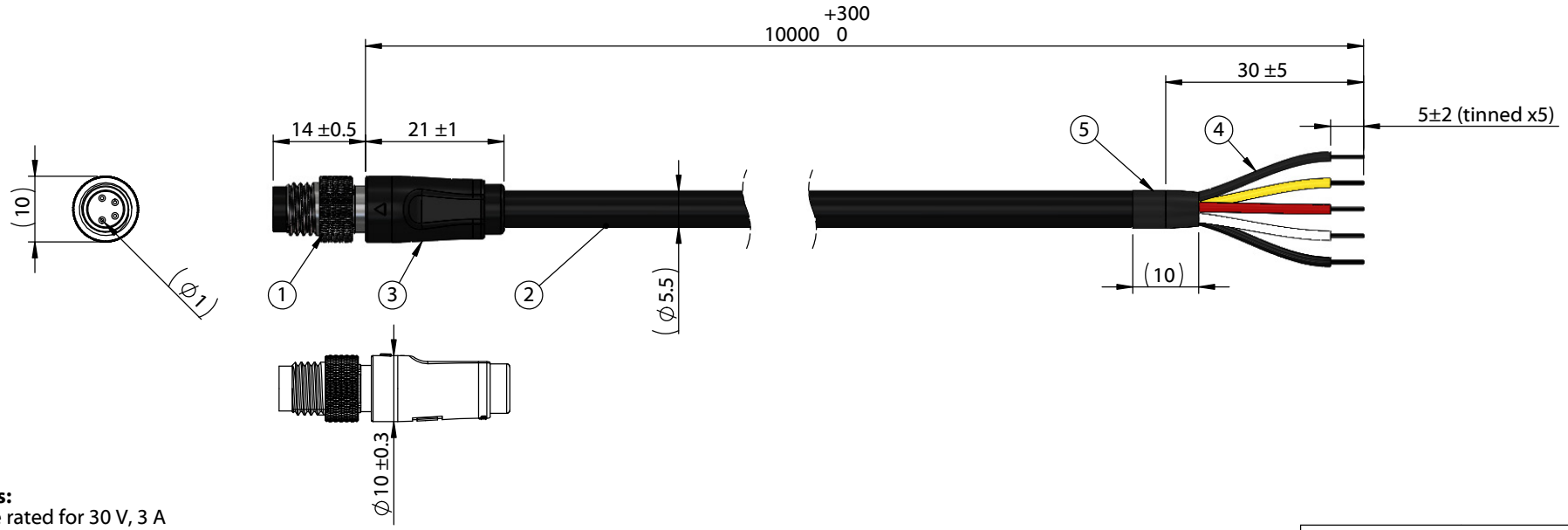

Notes:
Cable rated for 30 V, 3 A
Temperature: -40 ~ 105 °C
Oil resistant up to 60 °C
Water resistant up to 75 °C
UV resistant

IP67 waterproof rating when mated with corresponding (IP67) connector

Functionally equivalent components may be substituted

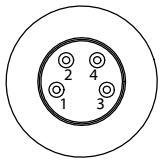

Front View
Not to Scale

Wiring Diagram	
50-00680	wire color
1	red
2	yellow
3	black
4	white
Shell	shield/drain

Revision:	Date:	Description:
A	3/4/2022	Initial release

Prepared: MP Digitally signed by MP Date: 2022.03.07 14:08:22 -08'00'

Verified: PB Digitally signed by PB Date: 2022.03.07 14:40:31 -08'00'

Dimensions are in millimeters.
Tolerances:
X: ± 0.5 mm
X.X: ± 0.3 mm
X.XX: ± 0.05 mm

Notes:

RoHS compliant

Function test: no open, no short circuit, no intermittent

Description:

Cable, 10000mm, 1.0 mm 4C 50-00680 M8 plug to 5mm tinned, 24 AWG, 30-01579 wire, shielded

TENSILITY
tel 1.541.323.3228 800 877.670.7118
fax 1.541.323.4202 web tensility.com

Size: A

Part number: 10-04150

Scale: 1:1

Sheet 1 of 1

5 4 3 2 1

To see a custom version of this cable assembly, call Tensility at 541-323-3228 or email engineering@tensility.com

Downloaded from Arrow.com.