PART NUMBER	SSL-LX3054LGD	REV	C

REV	E.C.N. NUMBER AND REVISION COMMENTS	DATE
A	REDRAWN, UPDATED SPECS.	05.10.95
B	E.C.N. #10BRDR. & REDRAWN IN 3D.	04.16.01
C	ECN-Lumex202300078	07.26.23

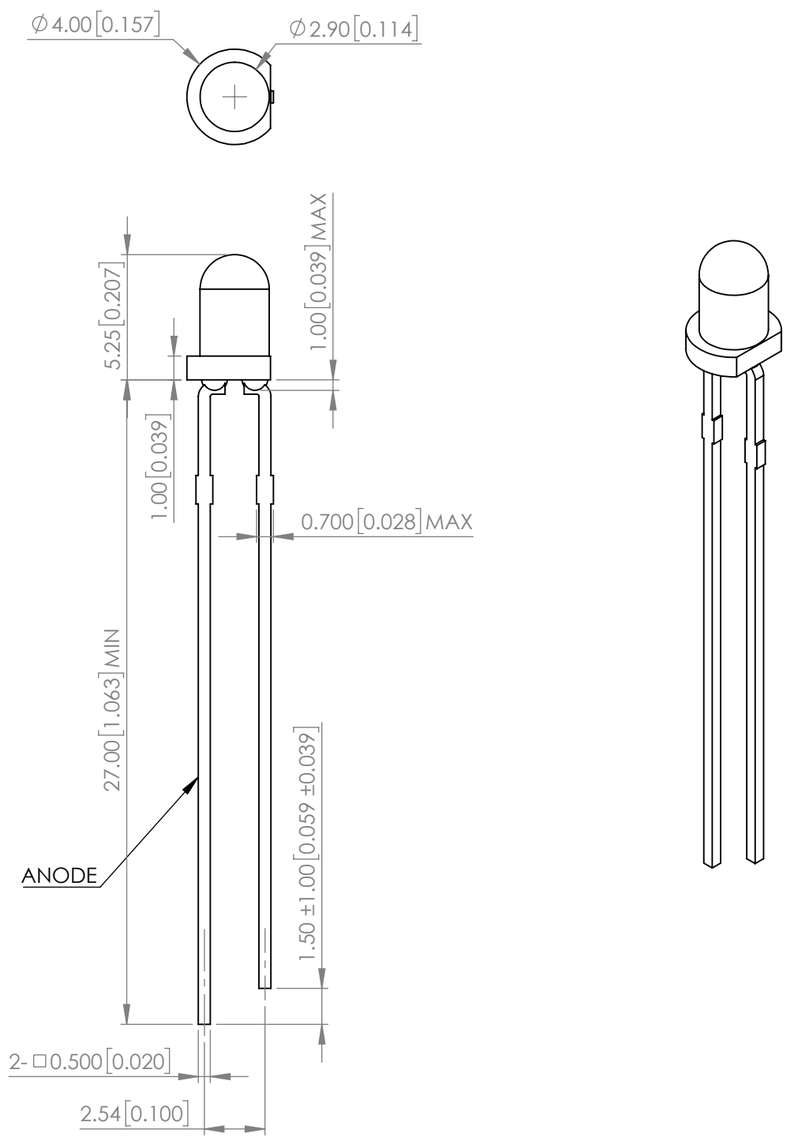

ELECTRO-OPTICAL CHARACTERISTIC TA=25℃

PARAMETER	MIN	TYP	MAX	UNITS	TEST COND
PEAK WAVELENGTH	-	565	-	nm	If=2mA
FORWARD VOLTAGE	-	1.9	2.25	Vf	If=2mA
REVERSE CURRENT	-	-	10	uA	V_R=5V
LUMINOUS INTENSITY	-	3	-	mcd	If=2mA
	-	30	-		If=20mA
VIEWING ANGLE	-	60	-	2x $theta_{1/2}$	-
EMITTED COLOR	GREEN				
EPOXY LENS FINISH	GREEN DIFFUSED				

ABSOLUTE MAXIMUM RATINGS TA=25℃

PARAMETER	MAX	UNITS
PEAK FORWARD CURRENT*	140	mA
FORWARD CURRENT	25	mA
REVERSE VOLTAGE	5	V
POWER DISSIPATION	60	mW
STORAGE TEMPERATURE	-40 TO +85	℃
OPERATING TEMPERATURE	-40 TO +85	℃
LEAD SOLDER TEMPERATURE**	3SEC MAX @260	℃

*1/10 DUTY CYCLE, 0.1mS PULSE WIDTH
**2mm FROM BODY

*UNLESS OTHERWISE SPECIFIED TOLERANCES PER DECIMAL PRECISION ARE: X=±1 (±0.039), X.X=±0.5 (±0.020), X.XX=±0.25 (±0.010), X.XXX=±0.127 (±0.005). LEAD SIZE=±0.05 (±0.002), LEAD LENGTH=±0.75 (±0.030). MIN= +DECIMAL PRECISION -0.00 MAX.= +0.00 -DECIMAL PRECISION

LUMEX Creating LED and LCD Solutions Together
425 N. GARY AVE.
CAROL STREAM, IL 60188
PHONE : 800-278-5666
FAX : 630-315-2150
WEB : WWW.LUMEX.COM

T-3mm(T-1), 560nm GREEN LED, GREEN DIFFUSED LENS, LOW CURRENT OPERATION.

****THE SPECIFICATIONS MAY CHANGE AT ANY TIME WITHOUT NOTICE.****

CONFIDENTIAL INFORMATION
THE INFORMATION CONTAINED IN THIS DOCUMENT IS THE PROPERTY OF LUMEX INC. EXCEPT AS SPECIFICALLY AUTHORIZED IN WRITING BY LUMEX INC., THE HOLDER OF THIS DOCUMENT SHALL KEEP ALL INFORMATION CONTAINED HEREIN CONFIDENTIAL AND SHALL PROTECT SAME IN WHOLE OR IN PART FROM DISCLOSURE AND DISSEMINATION TO ALL THIRD PARTIES.

DATE : 2023.07.26	DRAWN BY : E.C.
PAGE : 1 OF 1	CHKD BY : T.S.
SCALE : NTF	APRVD BY : G.Y.
UNIT : mm [INCH]	Pb

Downloaded from Arrow.com.