M5010 series



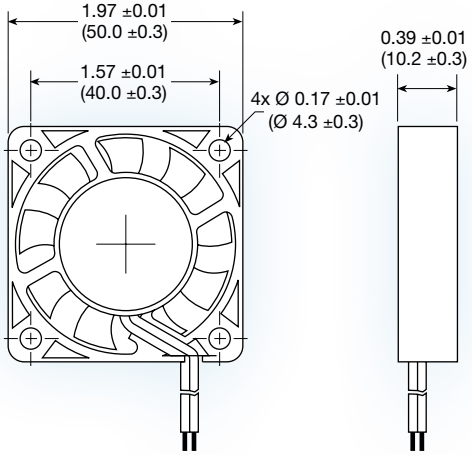

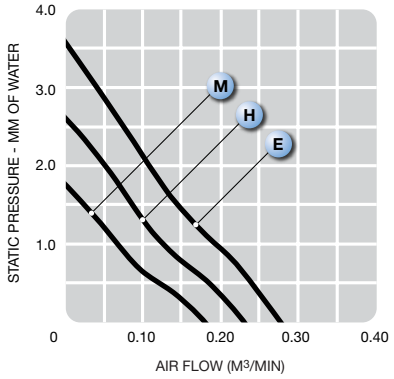

(50 x 50 x 10 mm)

1.97 x 1.97 x 0.39 inches

Construction:	UL94V-0 PBT impeller & frame
Bearing option:	ball bearing or sleeve
Connection:	AWG 26, UL1007 lead wires
Frame:	ribbed
Protection:	impedance
Options:	tachometer output signal

Model No.	Rated Voltage	Operating Voltage	Current	Speed	Air Volume		Max. Static Pressure (H_2O)		Sound Noise	Weight
	V	V	mA	RPM	M^3/Min.	CFM	MM	INCH	dbA	g
M5010M	5	3-6.0	60	4,000	0.18	6.36	1.77	0.07	24	20
M5010H	5	3-6.0	80	5,000	0.23	8.12	2.63	0.11	26	20
M5010E	5	3-6.0	150	6,000	0.28	9.89	3.60	0.14	28	20
M5010M	12	7-13.8	60	4,000	0.18	6.36	1.77	0.07	24	20
M5010H	12	7-13.8	70	5,000	0.23	8.12	2.63	0.11	26	20
M5010E	12	7-13.8	120	6,000	0.28	9.89	3.60	0.14	28	20

Downloaded from Arrow.com.