User Manual
SKU: ABX00043

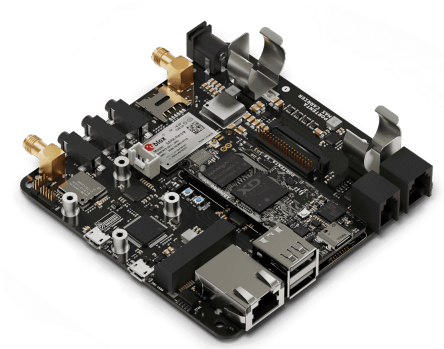

Description

Enable edge AI for high performance industrial, building automation and robotics applications with the Portenta Max Carrier. The Portenta Max Carrier transforms the Arduino® Portenta family into a standardized industrial platform, ready for use as a single board computer or as a reference design. The Portenta Max Carrier provides easy access to the onboard peripherals of the Arduino® Portenta X8 including Gigabit Ethernet, microSD and PCIe. This board further augments the capabilities of the Portenta X8 with Fieldbus, LoRa®, 4G, Cat-M1 and NB-IoT connectivity providing a platform for Industry 4.0.

Target areas:

Industry 4.0, prototyping, robotics, data logging

Downloaded from Arrow.com.

Features

Note: This board needs the Portenta X8 for full functionality. Not all features are available with the Arduino® Portenta H7.

- **High Density connectors compatible with Portenta family**
- **Memory**
  - Flash memory (2Mb QSPI)
  - Micro SD Card slot
- **Power**
  - Power Jack for external supply (6-36V)
  - On-board 18650 Li-ion battery connector with battery charger (3.7V). It can be used as backup power source if the external power supply fails.
- **Wireless modules**
  - Murata CMWX1ZZABZ-078 LoRa® module, SMA connector for antenna
  - SARA-R412M-02B (4G/Cat-M1/NBIoT), micro SIM, SMA connector for antenna
- **Connectors**
  - 2x USB-A female connectors
  - 1x Gigabit Ethernet connector (RJ45)
  - 1x FD-Can on RJ11
  - 1x mini PCIe
  - 1x Serial RS232/422/485 on RJ12
- **Audio**
  - 3x audio jacks: stereo line in, mic in, HP line out
  - 1x speaker connector
- **Debugging**
  - On board JLink OB / Blackmagic probe

Downloaded from Arrow.com.

Contents

1 The Board **5**
1.1 Application Examples 5
1.2 Accessories (Not Included) 5
1.3 Related Products 6
2 Ratings **6**
2.1 Recommended Operating Conditions 6
3 Functional Overview **7**
3.1 Block Diagram 7
3.2 Board Topology 8
3.3 Debugger 9
3.4 Audio 10
3.5 Cell Modem 10
3.6 LoRa® Module 10
3.7 Mini PCIe 11
3.8 USB 11
3.9 Ethernet 11
3.10 Serial Transceiver 11
3.11 CAN Transceiver 12
3.12 Micro SD Card Slot 12
3.13 Features Supported By Portenta Boards 12
3.14 Power Tree 13
4 Board Operation **14**
5 Connector Pinouts **14**
5.1 LoRa® Header (CN2) 14
5.2 Debug Header (CN3) 14
5.3 JTAG Header (CN1) 15
5.4 USB DBG0 (J10) 15
5.5 Speaker Connector (J20) 15
5.6 Header Connector (J5) 16
5.7 MicroSD Module 17
5.8 4P4C CAN Connector (J7) 17
5.9 6P6C Serial Connector (J6) 17
5.10 PCIe Connector 18

Downloaded from Arrow.com.

6 Mechanical Information **20**
6.1 Board Outline 20
6.2 Mounting Holes 21
6.3 Connector Positions 22
7 Certifications **23**
7.1 Declaration of Conformity CE DoC (EU) 23
7.2 Declaration of Conformity to EU RoHS & REACH 211 01/19/2021 23
7.3 Conflict Minerals Declaration 24
8 FCC Caution **24**
9 Company Information **25**
10 Reference Documentation **25**
11 Revision History **25**

Downloaded from Arrow.com.

1 The Board

1.1 Application Examples

The Portenta Max Carrier provides the user with almost limitless possibilities to create edge computing applications. Together with the Portenta X8, there is a wide range of application options.

Industrial IoT: The Portenta Max Carrier enables connectivity between the Portenta boards and Fieldbus (MODBUS/CAN bus). Join the Industry 4.0 bandwagon with edge computing and a range of connectivity options to increase the revenue on your specific application. Remotely control machinery through the Arduino Cloud or your own choice of third-party services without concern for vendor lock-in and identify process bottlenecks with continuous flow monitoring. The low power consumption and integrated Li-ion battery power management ensure reliable operation even in the face of external power failures.

Digital Smart Kiosk: Develop fully-fledged Information Kiosks, Point of Sales devices or other HMI solutions with the Portenta Max Carrier. Increase the productivity and satisfaction of your personnel and customers with real time information. The Portenta Max Carrier can be part of your solution for real time assessment of production environments, just-in-time management of warehouses, patient centric healthcare experiences and mobility management with a streamlined development process

Reference Design: The Portenta Max Carrier is a great reference design for developing your own custom products around the Portenta ecosystem that conforms to the industry standard specifications. Arduino Pro also provides full development, production and operation support to develop solutions tailored to your business needs.

1.2 Accessories (Not Included)

- LoRa® antenna (e.g. ANT-8/9-IPW1-SMA)
- Cellular LTE / CAT.M1 / NB-IoT antenna (e.g. ANT-5GW-SPS1-2)
- Mini PCIe expansion boards
- SIM card
- 3.7V 18650 Li-ion battery
- microSD card

Downloaded from Arrow.com.

1.3 Related Products

- Portenta H7 (Partial support)
- Portenta X8

2 Ratings

2.1 Recommended Operating Conditions

Symbol	Description	Min	Typ	Max	Unit
T	Thermal limits *(1)*	-20	25	85	°C
$V_{PWR_IN_12}$	Power Jack Input Voltage	6	7	36	V
P_{Max}	Maximum Power Consumption	-	-	5000	mW

(1) RF performance of the SARA-R4 modem above 65°C may be affected, although module is fully functional

Downloaded from Arrow.com.

3 Functional Overview

3.1 Block Diagram

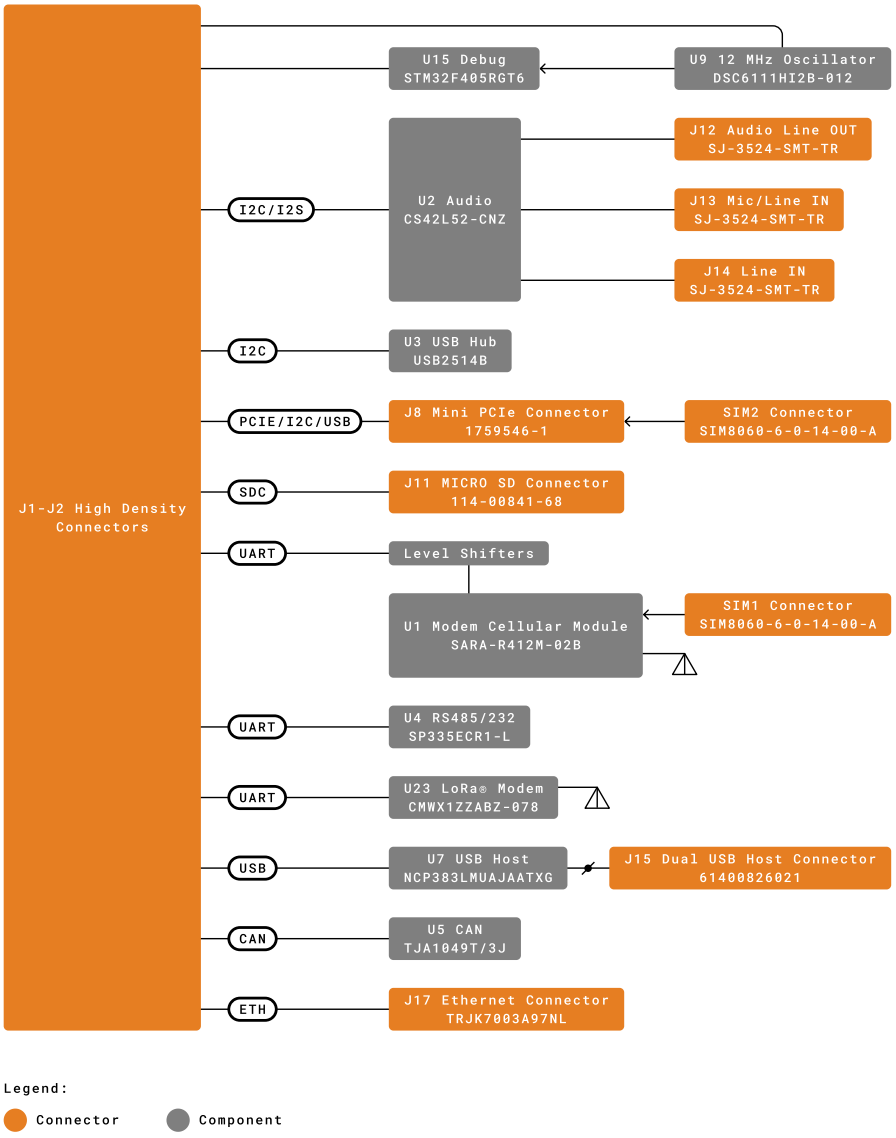

Block Diagram

Downloaded from Arrow.com.

3.2 Board Topology

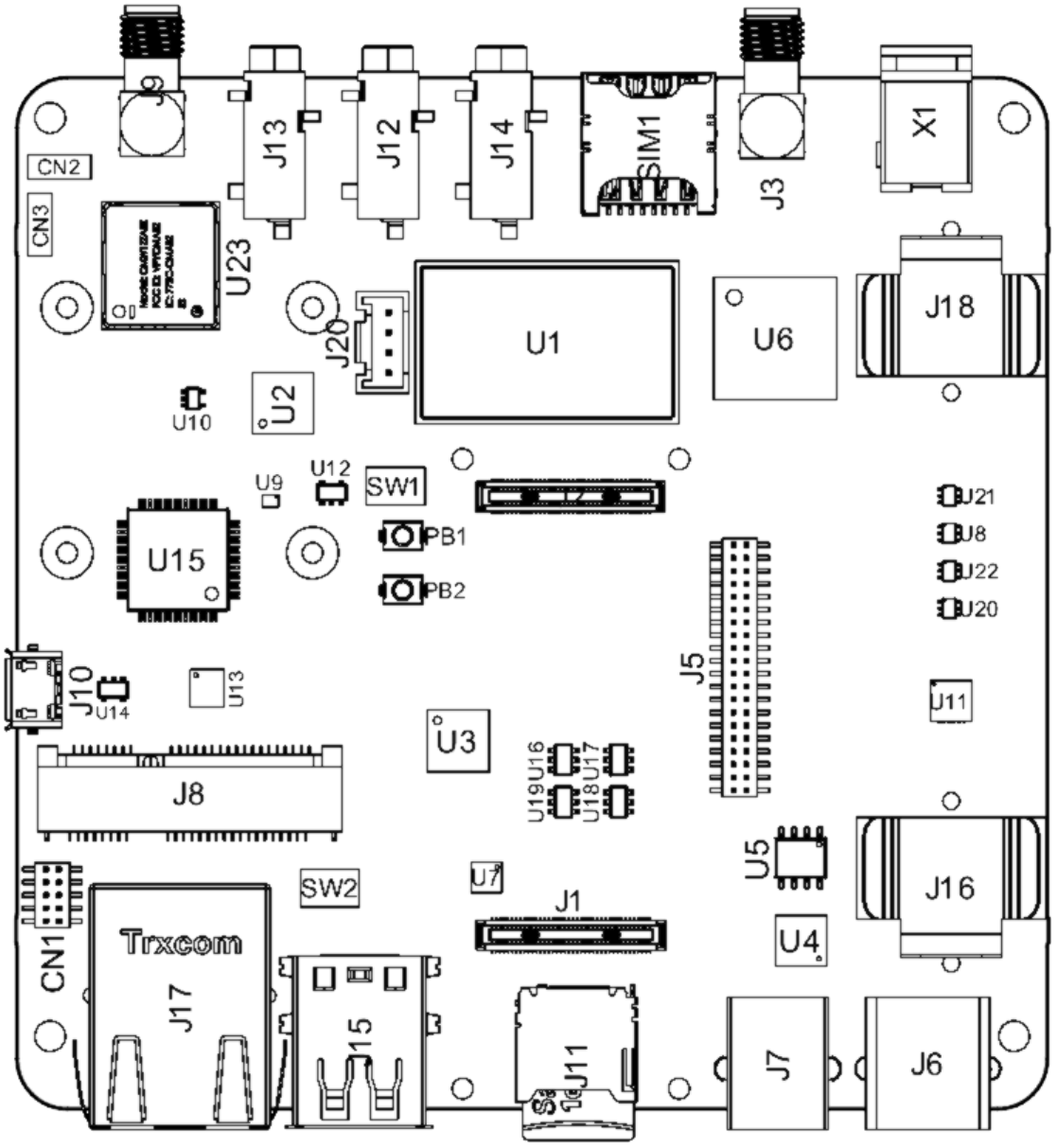

Board topology

Ref.	Description	Ref.	Description
U1	SARA-R412M-02B 4G LTE/Cat-M1/NB-IoT Modem IC	U2	CS42L52-CNZ Stereo Codec IC
U3	USB2514Bi/M2 4-port USB 2.0 Hub IC	U4	SP335EER1-L RS232/RS485/RS422 Transceiver IC
U5	TJA1049 CAN Transceiver IC	U6	MPM3550EGLE Non-isolated DC-DC IC
U7	NCP383 Current Limiting IC	U8,U20,U21,U22	SN74LVC1T45 Bi-directional logic level converter IC
U9	DSC6111HI2B 12MHz MEMS Oscillator IC	U10	SN74LVC1G125 Single Bus Buffer Gate IC

Downloaded from Arrow.com.

Ref.	Description	Ref.	Description
U11	BQ24195RGET 4.5A Single Cell Charger IC	U12	AP7311 1.8V 150mA LDO Linear Regulator IC
U13	TPS54620 6A Buck Regulator IC	U14	AP2112K-3.3TRG1 3.3V 600mA LDO Regulator IC
U15	STM32F405RG 168MHz 32 bit Arm® Cortex®-M4 MCU IC	U16-U19	74LVC1G157 Single 2-input multiplexer IC
U23	CMWX1ZZABZ-078 Murata LoRa® module	U24, U25	LM73100 Ideal Diode with Reverse Polarity Protection
J1, J2	DF40HC(3.5)-80DS-0.4V(51) High Density Connectors	J3	Right-Angle SMA Connector for Modem
J4	2-1734248-0 FPC Connector	J5	FW-20-05-G-D-254-150 Signal Break
J6	615006138421 RS232/RS485 Connector	J7	615006138421 CAN Connector
J8	1759546-1 Mini PCIe Connector	J9	Right-Angle SMA Connector for LoRa®
J10	ZX62-AB-5PA(31) Micro USB Debugger Connector with VBUS	J11	114-00841-68 Micro SD Connector
J12	SJ-3524-SMT-TR 3.5mm Headphone Out	J13	SJ-3524-SMT-TR 3.5mm Line In Right
J14	SJ-3524-SMT-TR 3.5mm Line In Left	J15	61400826021 2-port USB 2.0 Female Connector
J16	254TR Positive Li-ion Terminal	J17	TRJK7003A97NL Gigabit Ethernet Connector
J18	254TR Negative Li-ion Terminal		
J20	110990030 Connector for Speaker	X1	PJ-102A 5.5mm Power Jack Adapter
CN1	FTSH-105-01-F-DV 10-pin JTAG Header	CN2	Debug Header
CN3	LoRa® Debug Header	SIM1	2199337-5 microSIM Card Holder (for on-board modem)
SW1	218-2LPST Boot Select Switch	SW2	218-2LPST Switch *(2)*
PB1	PTS820J25KSMTRLFS Power On Button	PB2	PTS820J25KSMTRLFS Reset Button

3.3 Debugger

Debugging capabilities are integrated directly into the Portenta Max Carrier and are accessible via microUSB (J10). The J-link debugger is compatible with the Segger® J-Link OB and Blackmagic probes, driven by the STM32F405RGT6 controller (U15). In addition to providing access to the Portenta board JTAG ports, different sniffer channels for I2C, CAN and UART lines. The debugger firmware can be updated via SWD on CN3. Additionally, headers for debugging the LoRa® are accessible via CN2 with SWD.

Downloaded from Arrow.com.

3.4 Audio

The Portenta Max Carrier enables connection connections to analog audio channels. This is done through the low power CS42L52 stereo CODEC providing ADC/DAC between analog signals and the I2S protocol. An internal Class D amplifier eliminates the need for external audio amplification circuitry. Configuration of the CS42L52 is achieved over I2C. The CS42L52 IC operates over the 1V8 rail.

There are four analog audio interfaces accessible on the Portenta Max Carrier:

- 1x audio jack for right line (J13)
- 1x audio jack for left line in (J14)
- 1x audio jack for stereo headphone line out (J12)
- 1x connector for speaker out (J20)

Note: Audio not supported with the Portenta H7.

3.5 Cell Modem

The SARA-R412M-02B (U1) is a multi-region modem capable of connecting to 2G/Cat-M1/NBIoT networks worldwide. A dedicated SMA connector (J3) allows for an external antenna. The chip operates over the 1V8 power line. A microSIM slot is available (SIM1). SN74LVC1T45 bidirectional logic level shifters (U8, U20, U21, U22) act as middleware for connecting to 3V3 serial connections. The chip is powered by 3V8 and an internal regulator provides 1V8 that is used for the SIM card and the I/O. The corresponding SIM card slot for the cell modem is on the top side of the board, directly adjacent to the module.

> (2) Functionality dependent upon connected Portenta board. Check the respective datasheet.

3.6 LoRa® Module

The Portenta Max Carrier provides long range wireless connectivity for low bandwidth applications with the on-board Murata CMWX1ZZABZ-078 LoRa® transceiver module (U23). This module operates on 3V3. A dedicated SMA connector (J9) allows for an external antenna. Serial wire debug (SWD) headers are accessible via CN2.

Downloaded from Arrow.com.

3.7 Mini PCIe

The Portenta Max Carrier includes one female mini PCI Express card slot (J8). The connector is right angled and the board includes 2 removable standoffs for external module support. To use the spacer, add the plastic spacer on the top side of the board then attach the M2.5 screw from the back together with the washer. The Max Carrier supports two different Mini PCIe sizes. Pins 8, 10, 12 and 14 are reserved for UIM (in this case SIM).

Note: USB, I2C and SIM functionality over PCIe is available only for the X8. Full PCIe functionality not provided at this time.

3.8 USB

The Portenta Max Carrier also includes a USB 2.0 Hi-Speed Hub controller based on the USB2514B/M2 (U3) that manages the 2 USB devices from the USB type A connector (J15) plus the LoRa® (U23) and PCIe (J8) modules. J15 is protected by a NCP383LMUAJAATXG (U7) power switch and current limiter.

3.9 Ethernet

The Gigabit Ethernet physical interface (J17) is directly connected to the high density connector to the Portenta board. The connector includes an activity LED indication (orange) and speed indication (green).

Note: Gigabit Ethernet functionality is only supported on the Portenta X8.

3.10 Serial Transceiver

The Portenta Max Carrier includes a multi-protocol transceiver supporting RS-232, RS-485, and RS-422 serial standards (configurable) based on the SP335 IC. It is connected to a 6P6C Connector (RJ11, RJ12, RJ14, RJ25).

Default configuration:

- Full Duplex
- 232 protocol
- No data rate limit
- Enabled

Downloaded from Arrow.com.

3.11 CAN Transceiver

The Portenta Max Carrier includes a high speed CAN transceiver based on the TJA1049T/3J IC. It is connected to a 4P4C connector (RJ9, RJ10, RJ22).

3.12 Micro SD Card Slot

The on board Micro SD card can be used for data logging operations.

3.13 Features Supported By Portenta Boards

The supported features depend upon your choice of Portenta board used together with the Portenta Max Carrier.

Function	Portenta H7 Support	Portenta X8 Support	Notes
USB Host	USB 1.0	USB 2.0	Max Speed: USB 1.0 - 12 Mbps, USB 2.0 - 480 Mbps
Ethernet	Fast Ethernet	1 Gbps	Fast Ethernet - 100 Mbps
CAN	Yes	Yes	
Mini PCIe (USB)	USB 1.0	USB 2.0	Max Speed: USB 1.0 - 12 Mbps, USB 2.0 - 480 Mbps
Mini PCIe (PCIe)	No	PCIe 2.0	Portenta H7 only supports USB based PCIe cards
Battery Charger	Yes	Yes	
LoRa®	Yes	Yes	
NBIoT/CatM1/2G	No	Yes	Communication with the modem is via USB, no firmware support for the H7
Camera	No	MIPI up to 4 lanes	No MIPI camera support on H7
Audio	Limited	Yes	No firmware support for the H7
RS232/422/485	Yes	Yes	
on board JTAG debugging	Yes	No	
on board console to USB	Yes	Yes	
on board bus sniffing	Limited	Limited	Only hardware support

Downloaded from Arrow.com.

3.14 Power Tree

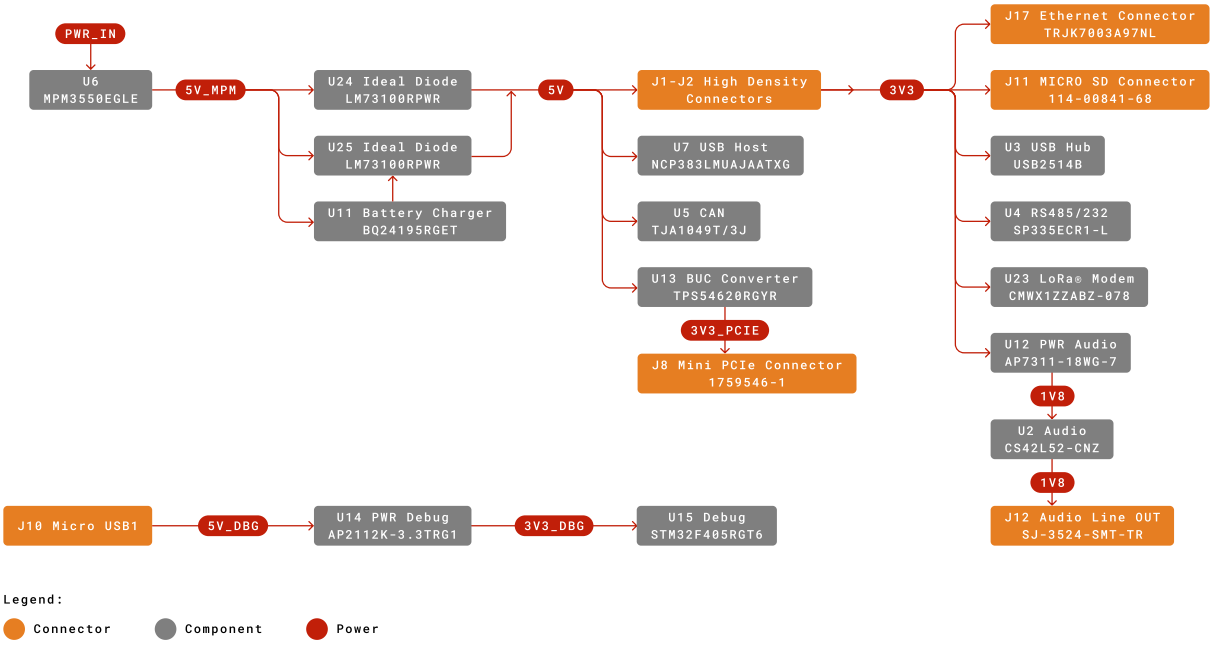

Power tree

The Portenta Max Carrier can either be powered through the power jack (X1) or a 18650 Li-ion/LiPo battery (J16, J18). The battery is charged while the minimum input voltage to X1 is met. The MPM3550EGLE (U6) provides a +5V rail to power the peripherals. This IC also provides power to the BQ24195RGET IC (U11) that manages the Li-ion battery and boosts the voltage to +5V. U11 also determines the battery status.

The power source can be determined by querying the System Status Register of U11 and check the PG_STAT field. PG_STAT = 1 means the board is powered with a power source on VBUS. Please refer to the IC datasheet for further details.

Priority is with the jack delivered power. The battery charger IC also outputs a +3V8 power rail that powers the modem (U1). The +5V power rail provides power to the Portenta board that regulates the voltage with its onboard buck converter to +3V3. The +3V3 power rail supplies power to the LoRa module (U23), 4-port USB hub (U3), microSD module (J11) and Fieldbus circuitry (U4). Audio is powered by a dedicated AP7311 LDO regulator that provides a low noise +1V8 power rail.

The debugger circuitry has a dedicated power supply AP2112K (U14) that runs off the micro USB voltage from J10. This enables the debugger to operate even if the Portenta board is not inserted.

Voltage range and max current are provided as a general guideline only. Consult converter datasheet for specific details.

Downloaded from Arrow.com.

4 Board Operation

Note: This board is intended to operate together with Portenta X8 (see section 1.4 Solution Overview). For more information see Portenta X8 datasheet

5 Connector Pinouts

5.1 LoRa® Header (CN2)

Pin	Function	Type	Description
1	+3V3	Power	+3V3 Power Rail
2	LoRa_SWDIO	Digital	LoRa® SWD Data Line
3	GND	Power	Ground
4	LoRa_SWCLK	Digital	LoRa® SWD Clock Line
5	GND	Power	Ground
6	NC	NC	Not Connected
7	NC	NC	Not Connected
8	NC	NC	Not Connected
9	GND	Power	Ground
10	LORA_RST	Digital	LoRa® module reset pin

5.2 Debug Header (CN3)

Pin	Function	Type	Description
1	3V3_BDG	Power	+3V3 Power Rail
2	DBG_SWDIO	Digital	SWD Data Line
3	GND	Power	Ground
4	DBG_SWCLK	Digital	SWD Clock Line
5	GND	Power	Ground
6	NC	NC	Not Connected
7	NC	NC	Not Connected
8	NC	NC	Not Connected
9	GND	Power	Ground
10	RST	Digital	Reset pin

Downloaded from Arrow.com.

5.3 JTAG Header (CN1)

Pin	Function	Type	Description
1	+3V3	Power	+3V3 Power Rail
2	JTAG_SWD	Digital	JTAG SWD Data Line
3	GND	Power	Ground
4	JTAG_SCK	Digital	JTAG Clock Line
5	GND	Power	Ground
6	JTAG_SWO	Digital	JTAG Trace Data Line
7	NC	NC	Not Connected
8	JTAG_TDI	Digital	JTAG Test Data In Line
9	JTAG_TRST	Digital	JTAG Test Reset Line
10	JTAG_RST	Digital	JTAG Reset Line

5.4 USB DBG0 (J10)

Pin	Function	Type	Description
1	VBUS	Power	Connected to +5V_DBG
2	D-	Differential	USB differential data -
3	D+	Differential	USB differential data +
4	ID	Digital	Not Connected
5	GND	Power	Ground

5.5 Speaker Connector (J20)

Pin	Function	Type	Description
1	SPK_OUTA+	Analog	Speaker A Positive Terminal
2	SPK_OUTA-	Analog	Speaker A Negative Terminal
3	SPK_OUTB+	Analog	Speaker B Positive Terminal
4	SPK_OUTB-	Analog	Speaker B Negative Terminal

Downloaded from Arrow.com.

5.6 Header Connector (J5)

Pin	Function	Type	Description
1	+3V3	Power	+3V3 Power Rail
2	GND	Power	Ground
3	VREF_P	Analog	Positive Analog Voltage Reference
4	VREF_N	Analog	Negative Analog Voltage Reference
5	A0	Analog	Analog Input 0
6	A1	Analog	Analog Input 1
7	A2	Analog	Analog Input 2
8	A3	Analog	Analog Input 3
9	A4	Analog	Analog Input 4
10	A5	Analog	Analog Input 5
11	A6	Analog	Analog Input 6
12	A7	Analog	Analog Input 7
13	GND	Power	Ground
14	GND	Power	Ground
15	SAI_CK	Digital	SAI Clock Line
16	CS	Digital	SPI1 Clock Select
17	SAI_FS	Digital	SAI Frame Synchronization
18	CK	Digital	SPI1 Clock Line
19	SAI_D0	Digital	SAI Data Line 0
20	MISO	Digital	SPI Main In Secondary Out
21	SAI_D1	Digital	SAI Data Line 1
22	MOSI	Digital	SPI1 Main Out Secondary In
23	SPDIF_TX	Digital	SPDIF Transmission
24	TX	Digital	Serial3 Transmission
25	SPDIF_RX	Digital	SPDIF Receive
26	RX	Digital	Serial3 Receive
27	SDA	Digital	I2C1 Data Line
28	RTS	Digital	Serial3 Ready To Send
29	SCL	Digital	I2C1 Clock Line
30	CTS	Digital	Serial3 Clear To Send
31	+3V8	Power	+3V8 Power Rail
32	SDA	Digital	I2C2 Dala Line
33	PWM0	Digital	PWM Output 0
34	SCL	Digital	I2C2 Clock Line
35	PWM1	Digital	PWM Output 1
36	+5V	Power	+5V Power Rail
37	PWM2	Digital	PWM Output 2
38	CAN1_TX	Digital	CAN Transmission Line
39	PWM3	Digital	PWM Output 3
40	CAN1_RX	Digital	CAN Receive Line

Downloaded from Arrow.com.

5.7 MicroSD Module

Pin	Function	Type	Description
1	DATA2	Digital	Data bit 2
2	CD/DAT3/SS	Digital	Chip Select/Data Line 3
3	CMD/MOSI	Digital	Main Out Secondary In/Command-Response Line
4	VDD	Power	+3V3 Power Rail
5	CLK/SCK	Digital	Clock
6	VSS	Power	Ground
7	DAT0/MISO	Digital	Main In Secondary Out/Data bit 0
8	DAT1	Digital	Data bit 1
CD1	CD1	Power	Card Detect
CD2	CD2	Power	Ground
G2	GND	Power	Ground
G3	GND	Power	Ground

5.8 4P4C CAN Connector (J7)

Pin	Function	Type	Description
1	+5V	Power	+5V (fused)
2	CANL	Differential	CAN Differential Signal Low
3	CANH	Differential	CAN Differential Signal High
4	GND	Power	Ground

5.9 6P6C Serial Connector (J6)

Note: Functions of pins 2-5 are dependent upon the configured protocol for the SP335

Pin	Function	Type	Description
1	GND	Power	Ground
2	Z	Digital	SP335 Out 1
3	Y	Digital	SP335 Out 2
4	A	Digital	SP335 In 2
5	B	Digital	SP335 In 1
6	GND	Power	Ground

Downloaded from Arrow.com.

5.10 PCIe Connector

Note: Only USB, I2C and USIM is available. PCIe functionality is reserved for future use and is not supported at this time

Pin	Function	Type	Description
1	NC	NC	Not Connected
2	+3V3_PCIE	Power	+3V3 Power Rail
3	NC	NC	Not Connected
4	GND	Power	Ground
5	NC	NC	Not Connected
6	NC	NC	Not Connected
7	PCIE_CLKREQ	Digital	PCIe Clock Request Signal
8	UIM_PWR	Power	SIM Power
9	GND	Power	Ground
10	UIM_DATA	Digital	SIM Data Line
11	mPCIe_CK_N	Differential	PCIe Clock Differential Negative
12	UIM_CLK	Digital	SIM Clock Signal
13	mPCIe_CK_P	Differential	PCIe Clock Differential Positive
14	UIM_RST	Digital	SIM Reset Signal
15	GND	Power	Ground
16	NC	NC	Not Connected
17	NC	NC	Not Connected
18	GND	Power	Ground
19	NC	NC	Not Connected
20	NC	NC	Not Connected
21	GND	Power	Ground
22	mPCIe_RST	Digital	PCIe Reset Signal
23	mPCIe_RX_N	Differential	PCIe Receive Differential Negative
24	NC	NC	Not Connected
25	mPCIe_RX_P	Differential	PCIe Receive Differential Positive
26	GND	Power	Ground
27	GND	Power	Ground
28	NC	NC	Not Connected
29	GND	Power	Ground
30	SCL	Digital	I2C Clock Line
31	mPCIe_TX_N	Differential	PCIe Transmission Differential Negative
32	SDA	Digital	I2C Data Line
33	mPCIe_RX_P	Differential	PCIe Transmission Differential Positive
34	GND	Power	Ground
35	GND	Power	Ground
36	USB_DN	Differential	USB Data Differential Negative
37	NC	NC	Not Connected
38	USB_DP	Differential	USB Differential Positive
39	+3V3_PCIE	Power	+3V3 Power Rail

Downloaded from Arrow.com.

Pin	Function	Type	Description
40	GND	Power	Ground
41	+3V3_PCIE	Power	+3V3 Power Rail
42	NC	NC	Not Connected
43	NC	NC	Not Connected
44	NC	NC	Not Connected
45	NC	NC	Not Connected
46	NC	NC	Not Connected
47	NC	NC	Not Connected
48	NC	NC	Not Connected
49	NC	NC	Not Connected
50	GND	Power	Ground
51	NC	NC	Not Connected
52	+3V3_PCIE	Power	+3V3 Power Rail

Downloaded from Arrow.com.

6 Mechanical Information

6.1 Board Outline

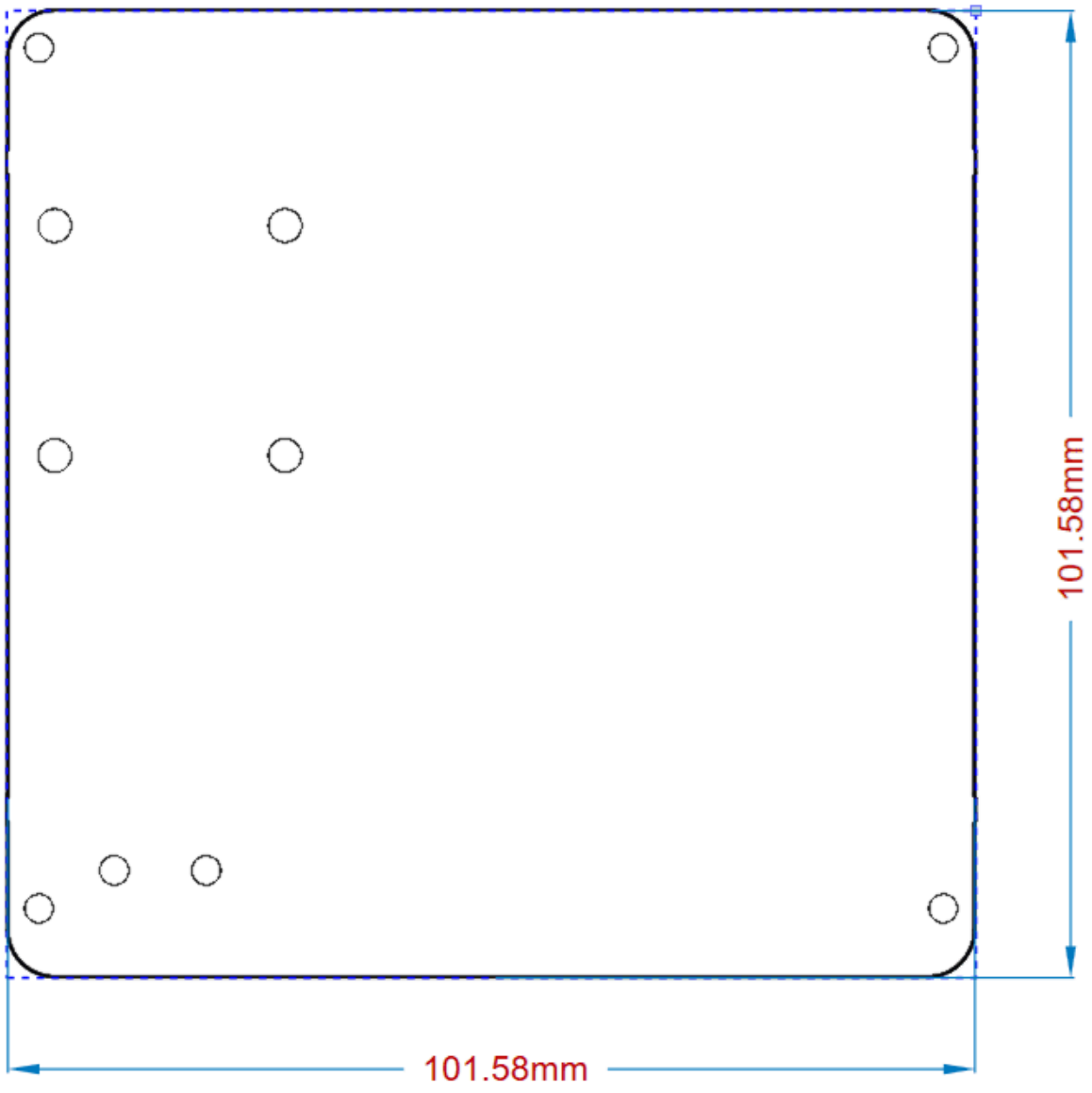

Board outline

Downloaded from Arrow.com.

6.2 Mounting Holes

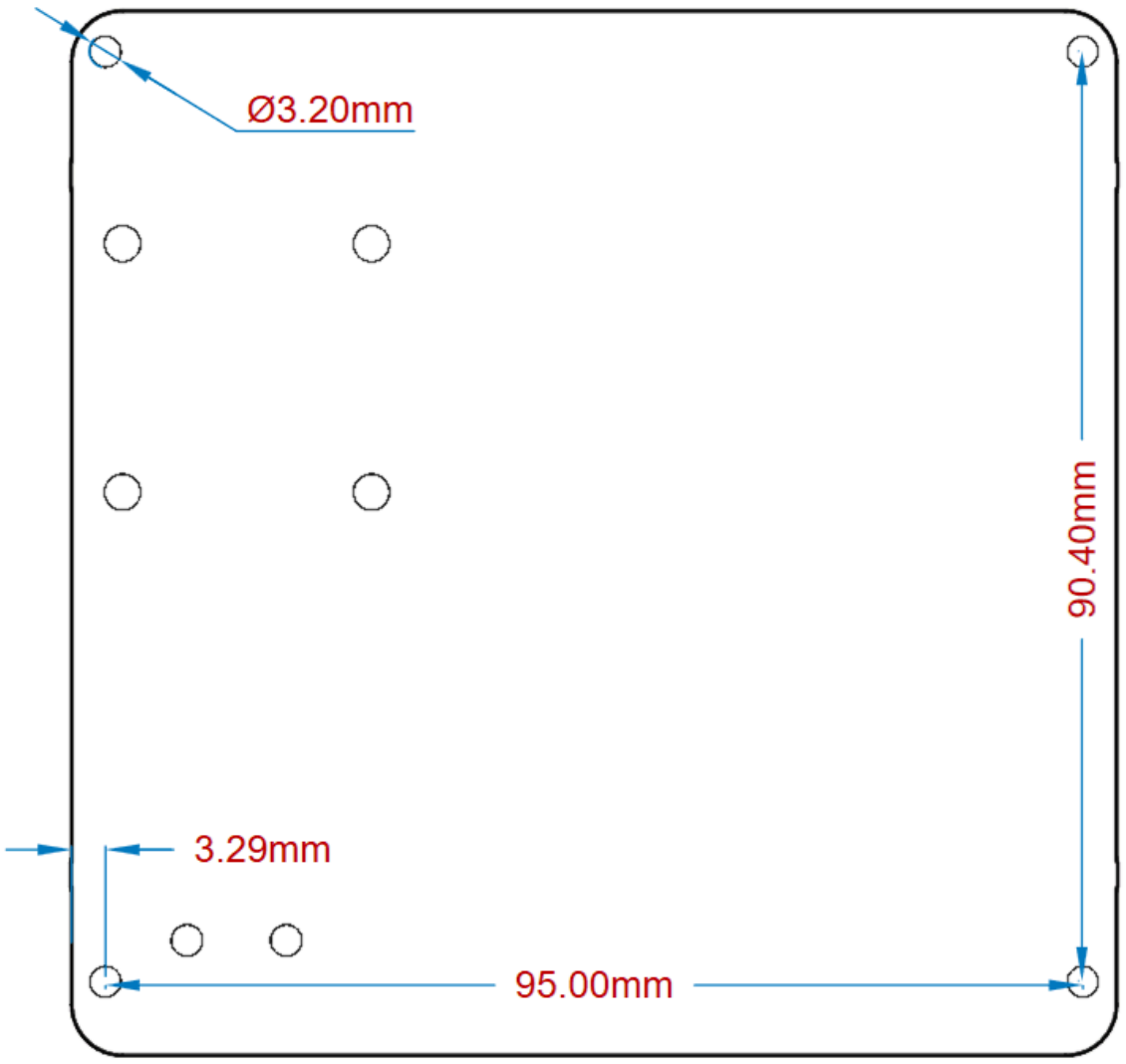

Mounting holes

Downloaded from Arrow.com.

6.3 Connector Positions

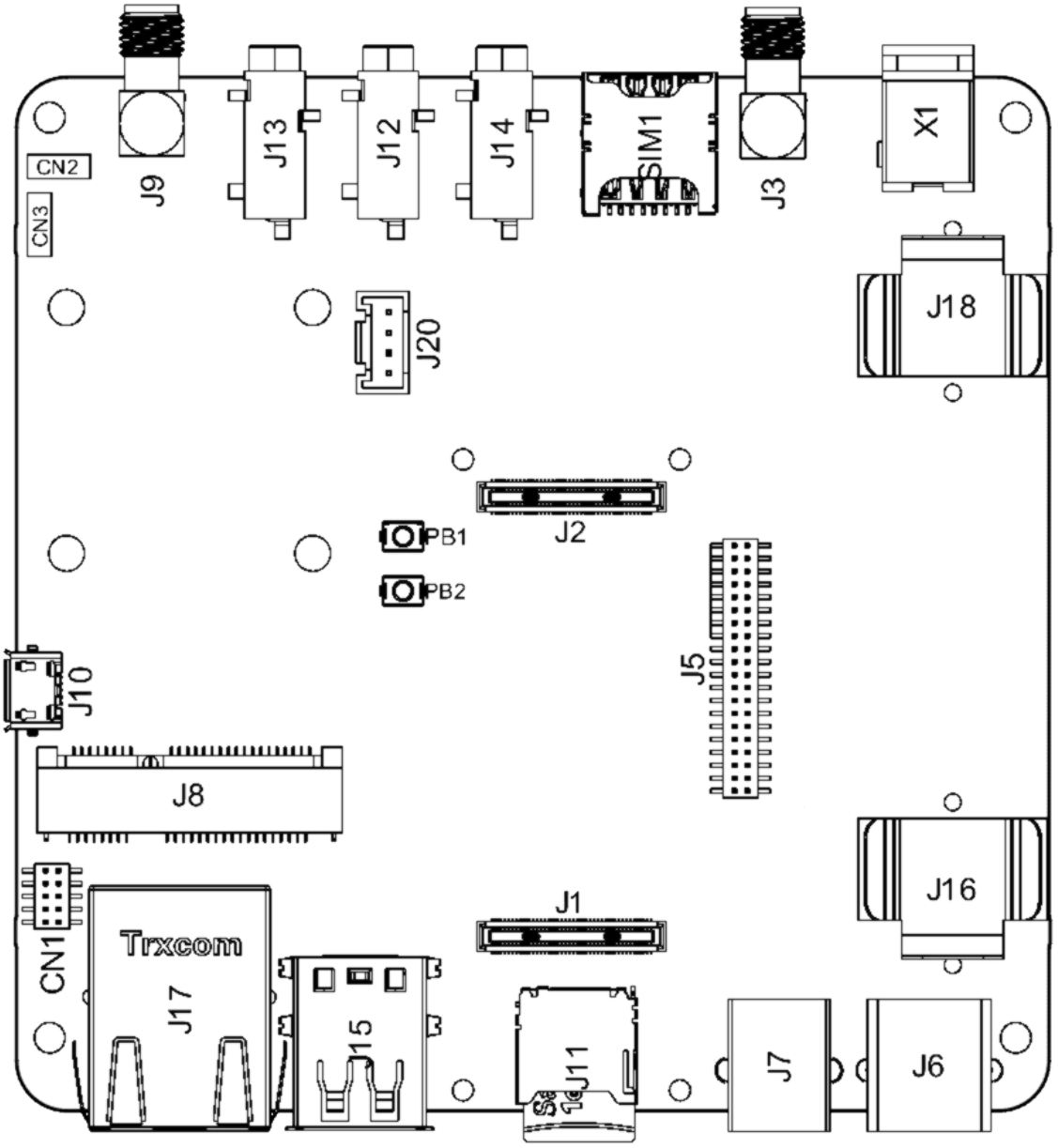

Connectors outline

Downloaded from Arrow.com.

7 Certifications

7.1 Declaration of Conformity CE DoC (EU)

We declare under our sole responsibility that the products above are in conformity with the essential requirements of the following EU Directives and therefore qualify for free movement within markets comprising the European Union (EU) and European Economic Area (EEA).

7.2 Declaration of Conformity to EU RoHS & REACH 211 01/19/2021

Arduino boards are in compliance with RoHS 2 Directive 2011/65/EU of the European Parliament and RoHS 3 Directive 2015/863/EU of the Council of 4 June 2015 on the restriction of the use of certain hazardous substances in electrical and electronic equipment.

Substance	Maximum limit (ppm)
Lead (Pb)	1000
Cadmium (Cd)	100
Mercury (Hg)	1000
Hexavalent Chromium (Cr6+)	1000
Poly Brominated Biphenyls (PBB)	1000
Poly Brominated Diphenyl ethers (PBDE)	1000
Bis(2-Ethylhexyl} phthalate (DEHP)	1000
Benzyl butyl phthalate (BBP)	1000
Dibutyl phthalate (DBP)	1000
Diisobutyl phthalate (DIBP)	1000

Exemptions : No exemptions are claimed.

Arduino Boards are fully compliant with the related requirements of European Union Regulation (EC) 1907 /2006 concerning the Registration, Evaluation, Authorization and Restriction of Chemicals (REACH). We declare none of the SVHCs (https://echa.europa.eu/web/guest/candidate-list-table), the Candidate List of Substances of Very High Concern for authorization currently released by ECHA, is present in all products (and also package) in quantities totaling in a concentration equal or above 0.1%. To the best of our knowledge, we also declare that our products do not contain any of the substances listed on the "Authorization List" (Annex XIV of the REACH regulations) and Substances of Very High Concern (SVHC) in any significant amounts as specified by the Annex XVII of Candidate list published by ECHA (European Chemical Agency) 1907 /2006/EC.

Downloaded from Arrow.com.

7.3 Conflict Minerals Declaration

As a global supplier of electronic and electrical components, Arduino is aware of our obligations with regards to laws and regulations regarding Conflict Minerals, specifically the Dodd-Frank Wall Street Reform and Consumer Protection Act, Section 1502. Arduino does not directly source or process conflict minerals such as Tin, Tantalum, Tungsten, or Gold. Conflict minerals are contained in our products in the form of solder, or as a component in metal alloys. As part of our reasonable due diligence Arduino has contacted component suppliers within our supply chain to verify their continued compliance with the regulations. Based on the information received thus far we declare that our products contain Conflict Minerals sourced from conflict-free areas.

8 FCC Caution

Any Changes or modifications not expressly approved by the party responsible for compliance could void the user's authority to operate the equipment.

This device complies with part 15 of the FCC Rules. Operation is subject to the following two conditions:

(1) This device may not cause harmful interference

(2) this device must accept any interference received, including interference that may cause undesired operation.

FCC RF Radiation Exposure Statement:

1. This Transmitter must not be co-located or operating in conjunction with any other antenna or transmitter.
2. This equipment complies with RF radiation exposure limits set forth for an uncontrolled environment.
3. This equipment should be installed and operated with minimum distance 20cm between the radiator & your body.

English: User manuals for license-exempt radio apparatus shall contain the following or equivalent notice in a conspicuous location in the user manual or alternatively on the device or both. This device complies with Industry Canada license-exempt RSS standard(s). Operation is subject to the following two conditions:

(1) this device may not cause interference

(2) this device must accept any interference, including interference that may cause undesired operation of the device.

French: Le présent appareil est conforme aux CNR d'Industrie Canada applicables aux appareils radio exempts de licence. L'exploitation est autorisée aux deux conditions suivantes :

(1) l' appareil nedoit pas produire de brouillage

(2) l'utilisateur de l'appareil doit accepter tout brouillage radioélectrique subi, même si le brouillage est susceptible d'en compromettre le fonctionnement.

IC SAR Warning: English This equipment should be installed and operated with minimum distance 20 cm between the radiator and your body.

French: Lors de l' installation et de l' exploitation de ce dispositif, la distance entre le radiateur et le corps est d 'au moins 20 cm.

Downloaded from Arrow.com.

Important: The operating temperature of the EUT can't exceed 85°C and shouldn't be lower than -40°C.

Hereby, Arduino S.r.l. declares that this product is in compliance with essential requirements and other relevant provisions of Directive 2014/53/EU. This product is allowed to be used in all EU member states.

Frequency bands	Typical Output Power
2.4 GHz, 40 channels	TBC

9 Company Information

Company name	Arduino SRL
Company Address	Via Andrea Appiani 25, 20900 Monza MB, Italy

10 Reference Documentation

Reference	Link
Arduino IDE (Desktop)	https://www.arduino.cc/en/Main/Software
Arduino IDE (Cloud)	https://create.arduino.cc/editor
Cloud Editor Getting Started	https://docs.arduino.cc/arduino-cloud/getting-started/iot-cloud-getting-started
Arduino Pro Website	https://www.arduino.cc/pro
Library Reference	https://www.arduino.cc/reference/en/
Online Store	https://store.arduino.cc/
Arduino Max Carrier Docs	https://docs.arduino.cc/hardware/portenta-max-carrier

11 Revision History

Date	Revision	Changes
28/02/2025	3	General information and trademark revision

| 03/09/2024 | 3 | Cloud Editor updated from Web Editor | | 11/20/2023 | 2 | Recommended antennas added | | 10/05/2022 | 1 | First Release |

Downloaded from Arrow.com.