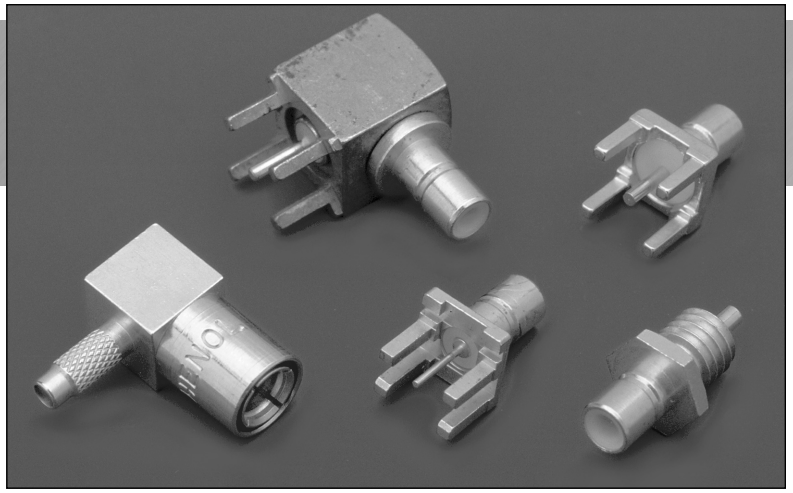

Description

The SMB name derives from SubMiniature B (the second subminiature design). The SMB was developed in the 1960's.

SMB is a smaller version of the SMA with snap-on coupling.

Amphenol's SMB connectors conform to the requirements of MIL-C-39012 and their interface is in compliance with MIL-STD-348.

Available in 50 & 75 ohm impedance

SMB provides broadband capability through 4 GHz with a snap-on connector design and utilizes die cast components on non-critical areas to provide a low cost solution.

Features and Benefits

- Broadband performance with low reflection DC to 4 GHz provides low cost connector combined with high quality.
- Quick connect/disconnect snap-on mating reduces installation time.
- Availability in 50 Ohm, 75 Ohm & High Density 75 Ohm ensures customer a solution to specific applications.
- Various plating options: Nickel, Gold, Tin Lead. Also selective plating provides corrosion resistance finish as well as good solderability characteristics.
- SMB PCB slide-on plug and jack allows board to board mounting with a low insertion force. Ideal for mating a high number of connectors on a pair of PCBs.

Application

- Antennas
- Automotive (GPS)
- Base Stations
- Cable Assemblies
- Components
- Instrumentation
- PC/LAN
- Process Controls
- Radio Boards
- Surge Protection
- Telecom
- Test and Measurement
- Video Systems

50 ohm Coaxial Connectors

Specifications	36
Plugs	37
Jacks	38
Bulkhead Receptacles	39-40
PCB Receptacles	41-43

75 ohm Coaxial Connectors

Specifications	44
Plugs, Jacks	45
Receptacles, PCB	46

75 ohm High Density Coaxial Connectors

Specifications	47
Plugs	48
PCB Receptacles	49

Downloaded from Arrow.com.

ELECTRICAL

Impedance	50 ohms
Frequency range	0-4 GHz with low reflection; usable to 10.0 GHz.
Voltage rating for RG-188/U cables	Sea level: 335 volts 70,000 ft: 85 volts
Dielectric withstanding voltage	750 VRMS RG-196 type 1000 VRMS for RG-188 type
VSWR straight connectors rt. angle connectors	RG-196/U series 1.30 + .04 f (GHz) 1.45 + .06 f (GHz)
	RG-188/U series
straight connectors rt. angle connectors	1.25 + .04 f (GHz) 1.35 + .04 f (GHz)
Contact resistance	Center contact: initial, 6.0 milliohms; After environmental, 8.0 Outer contact: initial, 1.0 milliohms; After environmental, 1.5 Braid to body: initial, 1.0 milliohms; After environmental, N/A
Insulation resistance	1000 megohms min.
RF leakage	-55 dB min. @ 2 - 3 GHz
Insertion loss: straight connectors rt. angle connectors	 0.30 dB @ 1.5 GHz 0.60 dB @ 1.5 GHz

MECHANICAL

Mating	50 ohm snap-on coupling, per MIL-STD-348
Engagement forces	Initial 14 lbs. max. engagement. After 500 matings, 14 lbs. max engagement and disengagement. 2 lbs. min. disengagement.
Connector affixment to cable	Braid and jacket: hex crimp.
Cable affixment to center contact	Solder
Contact captivation	All types, except as noted
Cable retention	Equal to breaking strength of cable employed
Connector durability	500 mating and unmating cycles min.

ENVIRONMENTAL

Temperature range	-65°C to + 165°C
Thermal shock	MIL-STD-202 method 107 (test cond. B) except high temp test @ + 200°C
Vibration	MIL-STD-202 method 204, snap-on (test cond. B) (15G's)
Shock	MIL-STD-202 method 213, snap-on (test cond. B) 75 G's @ 6 milliseconds 1/2 sine.
Corrosion	MIL-STD-202 method 101 (test cond. B) 5% salt solution.

MATERIAL

Bodies	Brass per QQB-626 or zinc per ASTM B86-71, as specified, nickel (or gold) plated as listed
Center contacts	Female: beryllium copper, gold plated Male: brass or beryllium copper, gold plated
Outer contact	Nickel or gold plated as listed.
Crimp ferrules	Annealed copper alloy
Insulators	TFE

PLUG

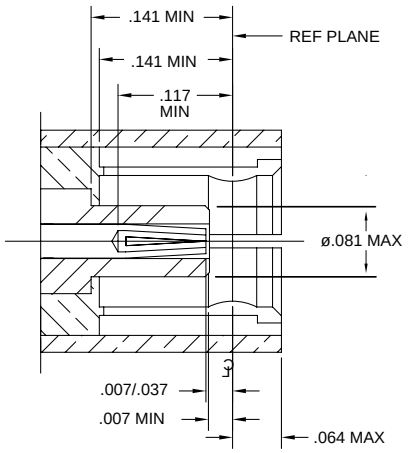

JACK

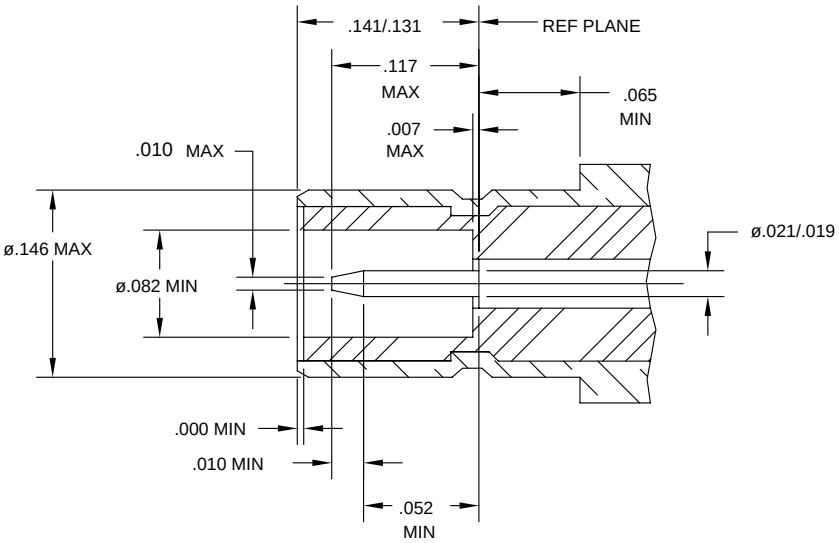

Downloaded from Arrow.com.

50 ohm Coaxial Connectors

Fig. 1

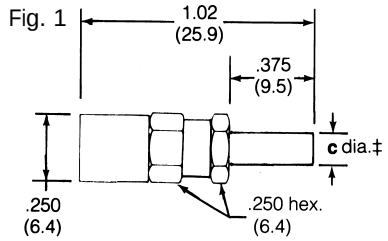

Fig. 1

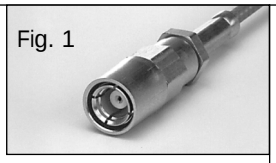

Fig. 1A

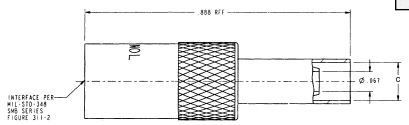

Fig. 1A

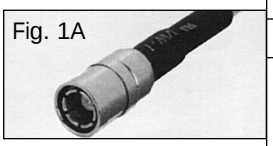

50Ω SMB Plugs - Braid Crimp/Solder Female Contact		
RG-174,179, 187,188, 316	**903-285P-51S**	Gold Plated
	903-508P-51S●	Gold Plated
	903-370P-51S▲	Nickel Plated
	903-577P-51S1✳	Nickel Plated
	903-577P-51S✳	Gold Plated
RG-178,196	**903-287P-51S**	Gold Plated
	903-509P-51S●	Gold Plated
	903-371P-51S▲	Nickel Plated
	903-578P-51S✳	Gold Plated
	903-578P-51S1✳	Nickel Plated
Dbl. Br. RG-316	**903-401P-51S**	Gold Plated
	903-579P-51S✳	Gold Plated
	903-579P-51S1✳	Nickel Plated

Fig. 2

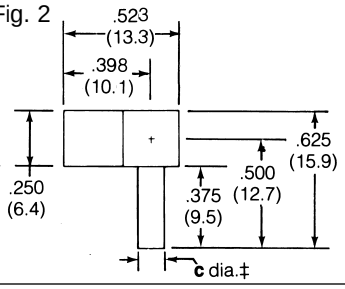

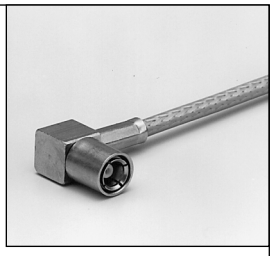

50Ω SMB Angle Plugs - Braid Crimp/Solder Female Contact		
RG-174 179, 187, 188, 316	**903-289P-51A**	Gold Plated
	903-289P-51A2▲✳	Gold Plated
	903-367P-51A	Nickel Plated
	903-367P-51A1	Nickel Plt. Body, Gold Plt Outer Cont.
	903-367P-51A2▲✳	Nickel Plated
RG-178, 196	**903-291P-51A**	Gold Plated
	903-291P-51A1▲✳	Gold Plated
	903-368P-51A	Nickel Plated
	903-368P-51A1▲✳	Nickel Plated
Dbl. Br. RG-316	**903-369P-51A**	Nickel Plated
	903-369P-51A2✳	Nickel Plated

Fig. 3

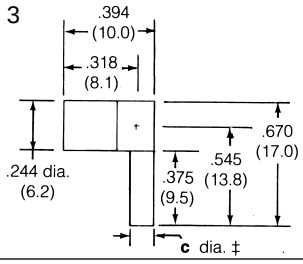

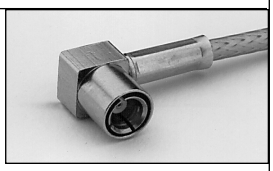

50Ω SMB Low Profile Angle Plugs, Braid Crimp/Solder Female Contact		
RG-174,179, 187,188, 316	**903-429P-51A**	Gold Plated

50 ohm SMB PLUGS & ANGLE PLUGS

Cable RG-/U	Connector Description	Cable Attachment Outer	Cable Attachment Inner	c Dia. In. (mm)	CAI	Plt.	Ins.	Notes	Amphenol Number	Fig.
RG-174,179,187, 188,316	Plug	Crimp	Solder	.128(3.3)‡	C60	P11	D1	Gold Plated Body	**903-285P-51S**	1
				.128(3.3)‡	C62	P11	D1	Gold Plated Body	● **903-508P-51S**	1A
				.128(3.3)‡	C60	P15	D1	Nickel Plated Body	▲ **903-370P-51S**	1
				.128(3.3)‡	C60	P15	D1	Nickel Plated Body	✳ **903-577P-51S1**	1A
				.128(3.3)‡	C60	P15	D1	Gold Plated Body	✳ **903-577P-51S**	1A
	Angle Plug	Crimp	Solder	.128(3.3)‡	C61	P11	D1	Gold Plated Body	● **903-289P-51A**	2
				.128(3.3)‡	C61	P11	D1	Gold Plated Body	●▲✳ **903-289P-51A2**	2
				.128(3.3)‡	C61	P15	D1	Nickel Plated Body	**903-367P-51A**	2
				.128(3.3)‡	C61	P15	D1	Nickel Plated Body	●▲✳ **903-367P-51A2**	2
				.128(3.3)‡	C61	P15	D1	Nickel Plated Body ★	**903-367P-51A1**	2
	Low Profile Angle Plug	Crimp	Solder	.128(3.3)‡	C61	P26	D1	Nickel Plated Body ★	**903-429P-51A**	3
RG-178,196	Plug	Crimp	Solder	.100(2.5)‡	C60	P11	D1	Gold Plated Body	**903-287P-51S**	1
				.100(2.5)‡	C62	P11	D1	Gold Plated Body	● **903-509P-51S**	1A
				.100(2.5)‡	C60	P15	D1	Nickel Plated Body	**903-371P-51S**	1
				.100(2.5)‡	C60	P15	D1	Gold Plated Body	✳ **903-578P-51S**	1A
				.100(2.5)‡	C60	P15	D1	Nickel Plated Body	✳ **903-578P-51S1**	1A
	Angle Plug	Crimp	Solder	.100(2.5)‡	C61	P11	D1	Gold Plated Body	**903-291P-51A**	2
				.100(2.5)‡	C61	P11	D1	Gold Plated Body	●▲✳ **903-291P-51A1**	2
				.100(2.5)‡	C61	P15	D1	Nickel Plated Body	**903-368P-51A**	2
				.100(2.5)‡	C61	P15	D1	Nickel Plated Body	●▲✳ **903-368P-51A1**	2
Dbl. Braid 316	Angle Plug	Crimp	Solder	.142(3.6)‡	C61	P22	D1	Nickel Plated Body	**903-369P-51A**	2
				.142(3.6)‡	C61	P15	D1	Nickel Plated Body	● ✳ **903-369P-51A2**	2
	Plug	Crimp	Solder	.142(3.6)‡	C60	P11	D1	Gold Plated Body	**903-401P-51S**	1
				.142(3.6)‡	C60	P11	D1	Gold Plated Body	✳ **903-579P-51S**	1A
				.142(3.6)‡	C60	P15	D1	Nickel Plated Body	✳ **903-579P-51S1**	1A

‡ i.d. of outer crimp ferrule ★ Gold plated outer contact ▲ Distributor stocked ✳ Diecast outer body ● Commercial grade

Downloaded from Arrow.com.

Fig. 1

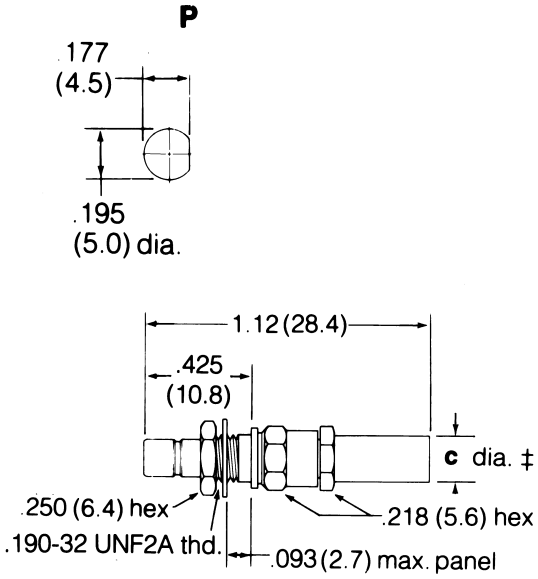

50Ω SMB Bulkhead Jacks
Braid Crimp/Solder Male Contact

RG-174,179, 187,188, 316	**903-505J-51S** ▲● Gold Plated
Dbl. Shield 316	**903-505J-51S1** ▲● Gold Plated

Fig. 2

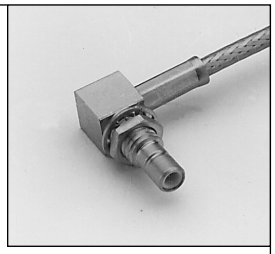

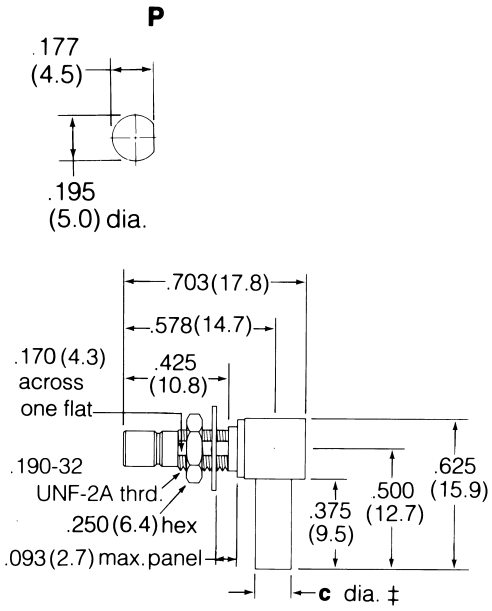

50Ω SMB Angle Bulkhead Jacks
Braid Crimp/Solder Male Contact

RG-174,179, 187,188, 316	**903-422J-51A** Gold Plated
Dbl. Shield 316	**903-422J-51A2** Gold Plated

50 ohm SMB BULKHEAD & ANGLE BULKHEAD JACKS

Cable RG-/U	Connector Description	Cable Attachment Outer	Cable Attachment Inner	c Dia. In. (mm)	MTG Hole	CAI	Plt.	Ins.	Notes	Amphenol Number	Fig.
RG-174,179,187, 188,316	Bulkhead Jack	Crimp	Solder	.128(3.3)‡	P	C60	P15	D1	Gold Plated Body	▲● **903-505J-51S**	1
	Angle Bulkhead Jack	Crimp	Solder	.128(3.3)‡	P	C61	P11	D1	Gold plated Body	**903-422J-51A**	2
Dbl. Shield 316	Bulkhead Jack	Crimp	Solder	.142(3.6)‡	P	C60	P15	D1	Gold Plated Body	▲● **903-505J-51S1**	1
	Bulkhead Jack	Crimp	Solder	.142(3.6)‡	P	C61	P15	D1	Gold Plated Body	**903-422J-51A2**	2

▲ Distributor stocked ● Commercial grade

Downloaded from Arrow.com.

50 ohm Bulkhead Receptacles

Fig. 1

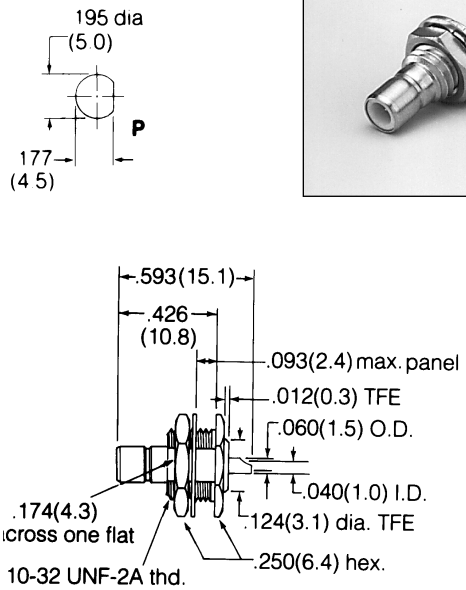

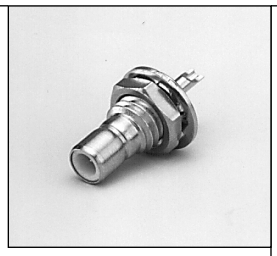

SMB Bulkhead Receptacle-Rear Mount
Male Contact/Solder Cup Terminal
903-305J-51R Gold Plated

Fig. 2

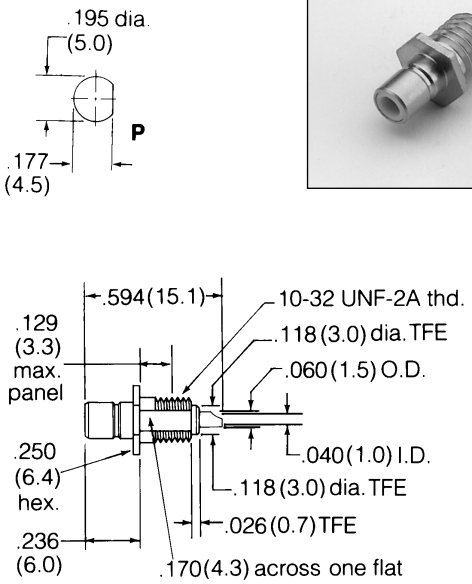

SMB Bulkhead Receptacle-Front Mount
Male Contact/Solder Cup Terminal
903-406J-51R ▲❑ Gold Plated

Fig. 3

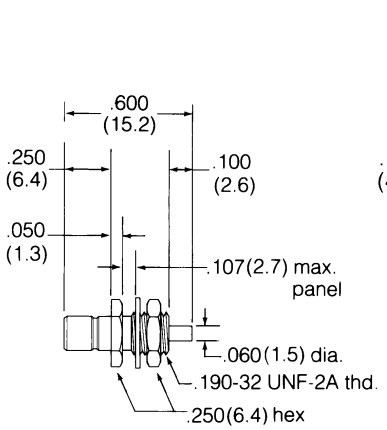

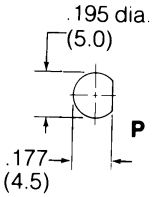

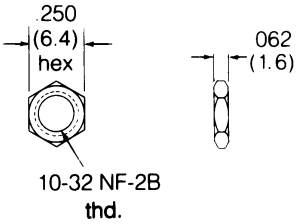

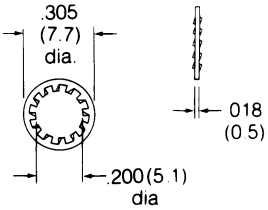

SMB Bulkhead Receptacle
Front Mount
Male Contact/Post Terminal
903-402J-51R ●▲❑ Gold Plated

Jam Nut for SMB Receptacles
903-10408-1 Gold Plated
903-10408-2 Nickel Plated

Lockwasher for SMB Receptacles
903-10409-1 Gold Plated
903-10409-2 Nickel Plated

50 ohm SMB BULKHEAD JACK RECEPTACLES & ACCESSORIES – captive male contacts

Connector Description	Terminal Type	MTG Hole	Plt.	Ins	Construction Notes	Amphenol Number	Fig.
Bulkhead Jack Receptacle, Rear Mount	Solder Cup	P	P9	D1	Gold Plated Body	**903-305J-51R**	1
Bulkhead Jack Receptacle, Front Mount	Solder Cup	P	P11	D1	Gold Plated Body	▲❑ **903-406J-51R**	2
Bulkhead Jack Receptacle, Front Mount	Blunt Post	P	P9	D1	Gold Plated Body	●▲❑ **903-402J-51R**	3
Jam Nut	—	—	—	—	See Fig. 3	**903-10408-1, -2**	3
Lockwasher	—	—	—	—	See Fig. 3	**903-10409-1, -2**	3

▲ Distributor stocked ❑ Jam Nut and Lockwasher sold separately. ● Commercial grade

Downloaded from Arrow.com.

50 ohm Bulkhead Receptacles

Fig. 1

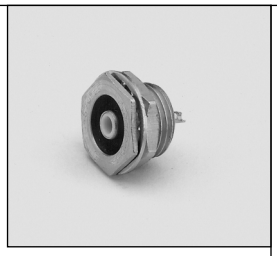

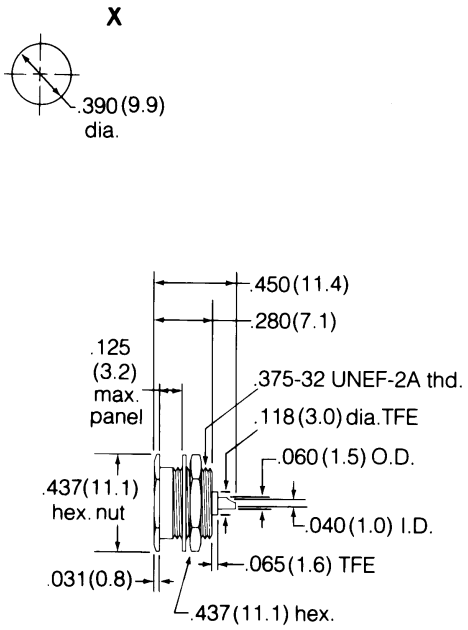

SMB Recessed Bulkhead Jack Receptacle
Front Mount/Male Contact/Solder Cup Terminal
903-407J-51R Gold Plated

Fig. 2

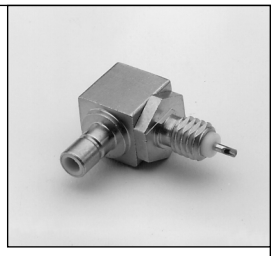

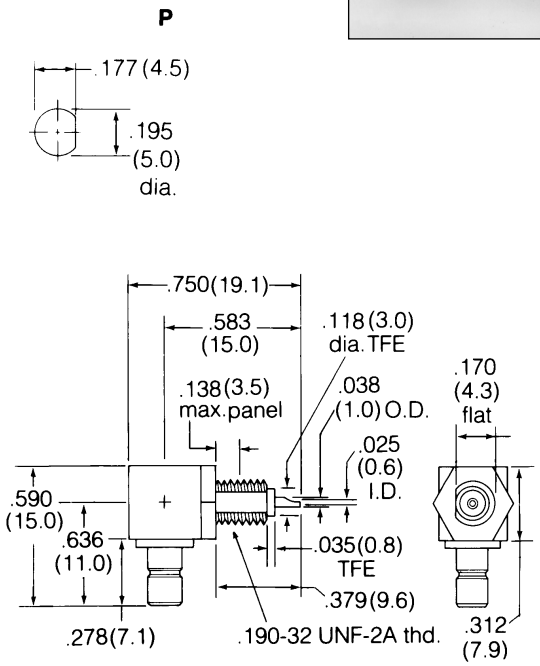

SMB Angle Bulkhead Jack Receptacle
Front Mount/Male Contact/Solder Cup Terminal
903-416J-51R▲❑ Gold Plated

50 ohm SMB BULKHEAD JACK RECEPTACLES – captive male contacts

Connector Description	Terminal Type	MTG Hole	Plt.	Ins	Construction Notes	Amphenol Number	Fig.
Recessed Bulkhead Jack Receptacle, Front Mount	Solder Cup	X	P11	D1	Gold Plated Body	903-407J-51R	1
Angle Bulkhead Jack Receptacle, Front Mount	Solder Cup	P	P11	D1	Gold Plated Body	▲❑ 903-416J-51R	2

▲ Distributor stocked ❑ Jam Nut and Lockwasher sold separately

Downloaded from Arrow.com.

50 ohm PCB Receptacles

Fig. 1

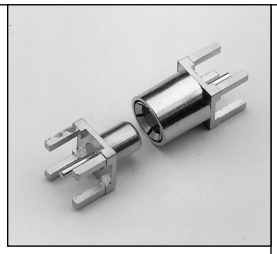

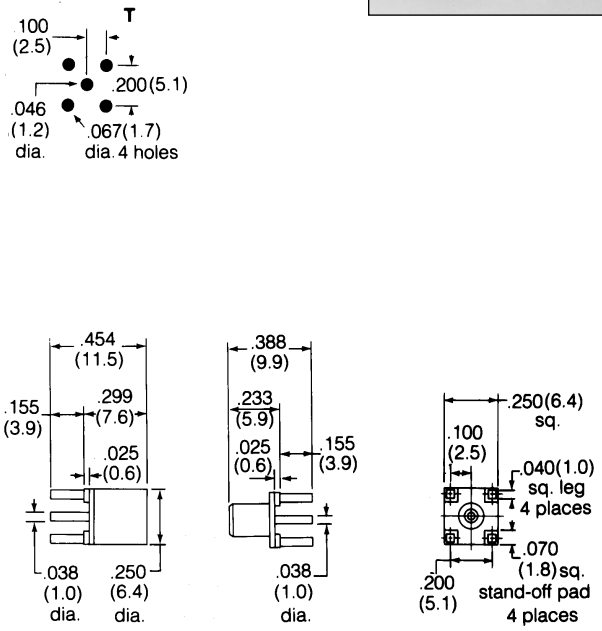

SMB PCB Slide-on Board-to-Board
Interconnect for .360"(9mm) Bd. Spacing
Plug: **903-410P-53P** Gold Plated
Jack: **903-409J-53P** Gold Plated

Fig. 2

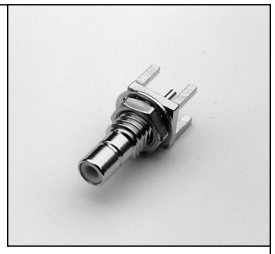

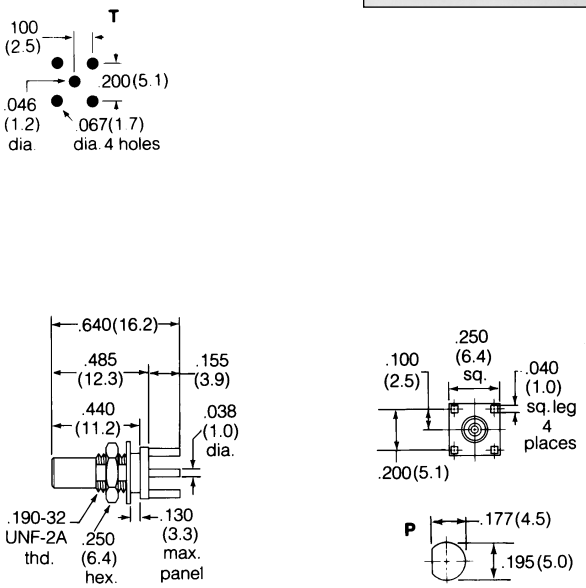

SMB PCB Bulkhead Jack Receptacle
Male Contact/Post Terminal/Four Legs
903-375J-53P Nickel Plated

50 ohm SMB BULKHEAD JACK AND PRINTED CIRCUIT RECEPTACLES – captive male contacts

Connector Description	Terminal Type	MTG Hole	Plt.	Ins	Construction Notes	Amphenol Number	Fig.
PCB Slide-on Board-to-Board Interconnect for .360"(9mm) Bd. Spacing/Four Legs	Blunt Post	T	P9	D1	Plug/Gold Plated	903-410P-53P	1
					Jack/Gold Plated	903-409J-53P	
PCB Bulkhead Jack Receptacle/,Four Legs	Blunt Post	T/P	P6	D1	Nickel Body/No Stand-off Pads	903-375J-53P	2

Downloaded from Arrow.com.

50 ohm PCB Receptacles

Fig. 1

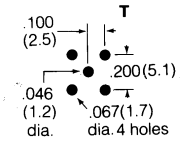

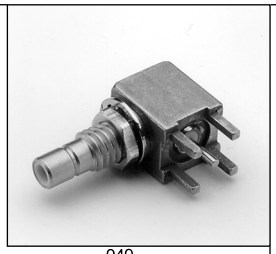

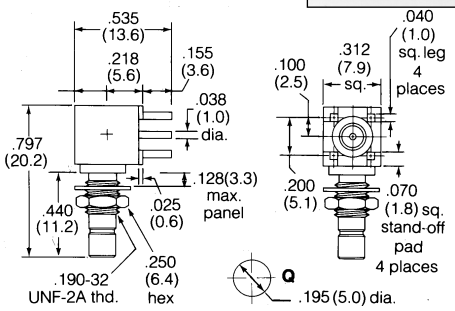

SMB PCB Angle Bulkhead Receptacle
Male Contact/Four Legs/Leak Tight
903-413J-51A
Tin Lead Plated Cube Body & Legs,
Gold Plated Interface & Contact

Fig. 2

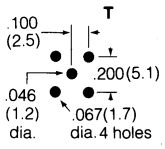

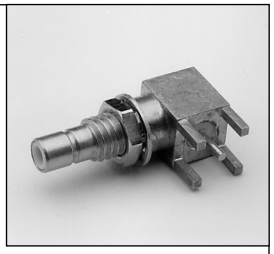

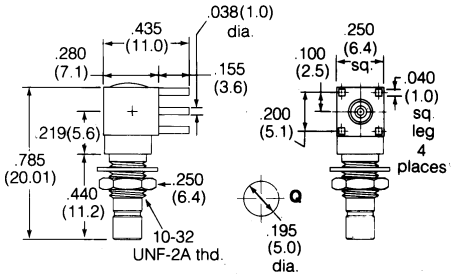

SMB PCB Angle Bulkhead Receptacle
Male Contact/Four Legs/No Stand-off Pads
903-376J-51A
Tin Lead Plated Cube Body & Legs,
Gold Plated Interface & Contact

Fig. 3

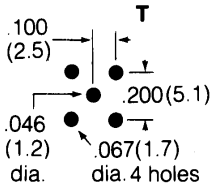

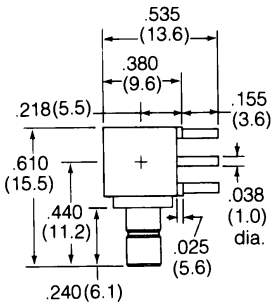

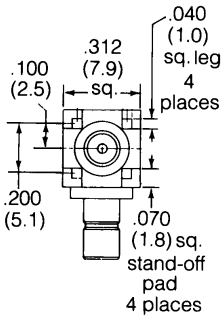

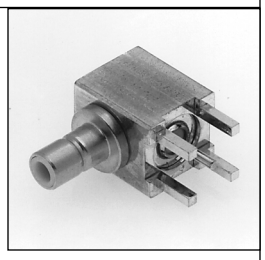

SMB PCB Angle Jack Receptacle
Male Contact/Four Legs/Leak Tight
903-373J-51A ▲
Tin Lead Plated Cube Body & Legs,
Gold Plated Interface & Contact

50 ohm SMB BULKHEAD JACK AND PRINTED CIRCUIT RECEPTACLES – captive male contacts

Connector Description	Terminal Type	MTG Hole	Plt.	Ins	Construction Notes	Amphenol Number	Fig.
PCB Angle Bulkhead Jack Receptacle, Four Legs/Leak Tight	Blunt Post	T/Q	P16	D1	Tin Lead Plt. Cube Body & Legs Gold Plt. Interface & Contact	903-413J-51A	1
PCB Angle Bulkhead Jack Receptacle, Four Legs/No Stand-off Pads	Blunt Post	T/Q	P16	D1	Tin Lead Plt. Cube Body & Legs Gold Plt. Interface & Contact	903-376J-51A	2
PCB Angle Jack Receptacle Four Legs/Leak Tight	Blunt Post	T	P16	D1	Tin Lead Plt. Cube Body & Legs Gold Plt. Interface & Contact	▲ 903-373J-51A	3

▲ Distributor stocked ● Commercial grade

Downloaded from Arrow.com.

50 ohm PCB Receptacles

Fig. 1

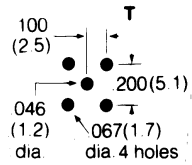

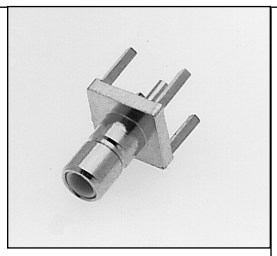

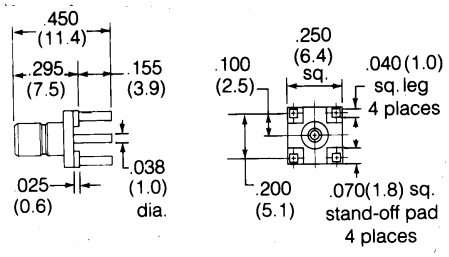

SMB PCB Receptacle Jack
Post Terminal/Four Legs
903-415J-51P Gold Plated
903-499J-51P3✳ Tin Plated Body & Legs
903-499J-51P2▲✳ Gold Plated

Fig. 2

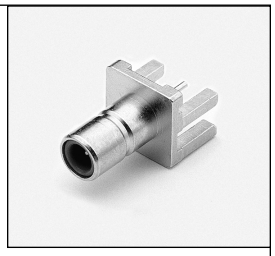

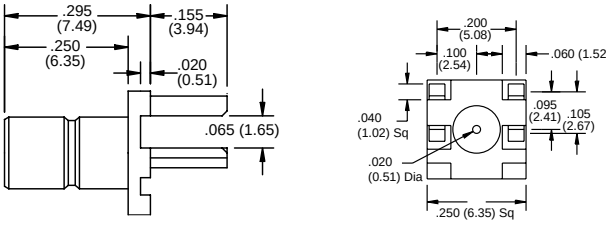

50Ω SMB PCB End Mount Jack Receptacle
Male Contact/Blunt Post Terminal
903-518J-51P Gold Plated
Gold Plated Contact

Fig. 3

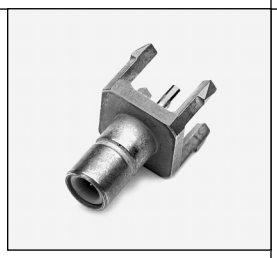

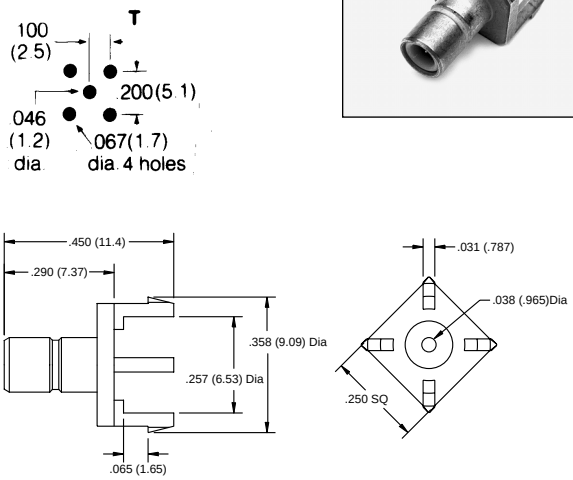

SMB PCB Jack Receptacle
Board Lock
903-515J-51P Tin Lead Plt Body, Gold Plated Contact

Fig. 4

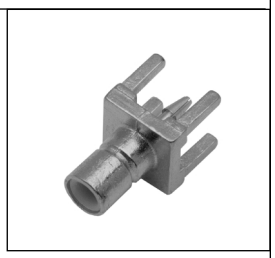

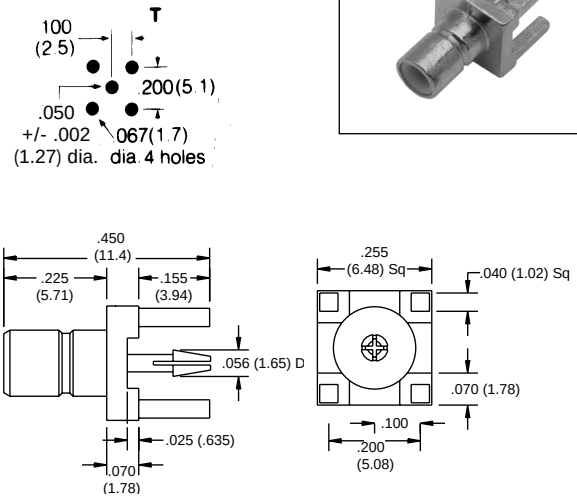

SMB PCB Receptacle Jack
Board Lock
903-499J-51P▲✳ Gold Plated
903-499J-51P1✳ Nickel Plated

50 ohm SMB PRINTED CIRCUIT RECEPTACLES

Connector Description	Terminal Type	MTG Hole	Plt.	Ins	Construction Notes	Amphenol Number	Fig.
PCB Jack Receptacle/Four Legs	Blunt Post	T	P11	D1	Gold Plated Body	903-415J-51P	1
					Gold Plated Body	▲✳ 903-499J-51P2	
			P6		Tin Plated Body, Gold Plt. contact	✳ 903-499J-51P3	
PCB Bulkhead Jack Receptacle/,Four Legs	Blunt Post	T	P9	D1	Gold Plt. Body	903-518J-51P	2
PCB Bulkhead Jack Receptacle/,Four Legs	Blunt Post	T	P9	D1	Tin Lead Plt Body, Gold Plt. contact	903-515J-51P	3
PCB Bulkhead Jack Receptacle	Board Lock	T	P11	D1	Gold Plated Body	▲✳ 903-499J-51P	4
PCB Bulkhead Jack Receptacle	Board Lock	T	P11	D1	Nickel Plated Body	✳ 903-499J-51P1	

▲ Distributor stocked ✳ Die cast outer body

Downloaded from Arrow.com.

Amphenol standard 75 ohm SMB 903 series connectors are constructed in accordance with the requirements of MIL-C-39012 and their interface is in compliance with MIL-STD-348. These subminiature units feature positive lock mating as well as snap-on mating faces.

They are available in a variety of configurations and styles. This series has broadband performance with low reflection.

MATERIAL

Bodies	Brass per QQB-626, as specified, nickel (or gold) plated as listed
Center contacts	Female: beryllium copper, gold plated Male: brass or beryllium copper, gold plated
Outer contact	Nickel or gold plated as listed.
Crimp ferrules	Annealed copper alloy
Insulators	TFE

SPECIFICATIONS

ELECTRICAL

Impedance	75 ohms
Frequency range	0-4 GHz with low reflection; usable to 10.0 GHz.
Voltage rating for RG-188/U cables	Sea level: 335 volts 70,000 ft: 85 volts
Dielectric withstanding voltage	1,000 VRMS
RF high potential withstanding voltage	RG-195/U series 500 VRMS
Corona level	RG-195/U series 400 min. volts @ 70K ft.
VSWR straight connectors right angle connectors	RG-196/U series 1.30 + .04 f (GHz) RG-188/U series 1.25 + .04 f (GHz) RG-196/U series 1.45 + .06 f (GHz) RG-188/U series 1.35 + .04 f (GHz)
Contact resistance	Center contact: initial, 6.0 milliohms; After environmental, 8.0 Outer contact: initial, 1.0 milliohms; After environmental, 1.5 Braid to body: initial, 1.0 milliohms; After environmental, N/A
Insulation resistance:	1000 megohms min.
RF leakage	-55 dB min. @ 2 - 3 GHz
Insertion loss: straight right angle	0.30 dB @ 1.5 GHz 0.60 dB @ 1.5 GHz

* These characteristics are typical and may not apply to all connectors.

This series is also called SMZ.

MECHANICAL

Mating	75 ohm snap-on coupling, per MIL-STD-348
Engagement forces	Initial 14 lbs. max. engagement. After 500 matings, 14 lbs. max engagement and disengagement. 2 lbs. min. disengagement.
Connector affixment to cable	Braid and jacket: hex crimp.
Cable affixment to center contact	Solder
Contact captivation	All types, except as noted
Cable retention	Equal to breaking strength of cable employed
Connector durability	500 mating and unmating cycles min.

ENVIRONMENTAL

Temperature range	-65°C to + 165°C
Thermal shock	MIL-STD-202 method 107 (test cond. B) except high temp test @ + 200°C
Vibration	MIL-STD-202 method 204, snap-on (test cond. B) (15G's)
Shock	MIL-STD-202 method 213, snap-on (test cond. B) 75 G's @ 6 milliseconds 1/2 sine.
Corrosion	MIL-STD-202 method 101 (test cond. B) 5% salt solution.

PLUG

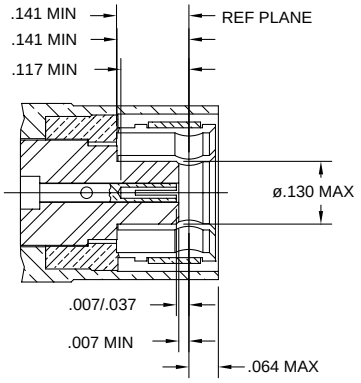

JACK

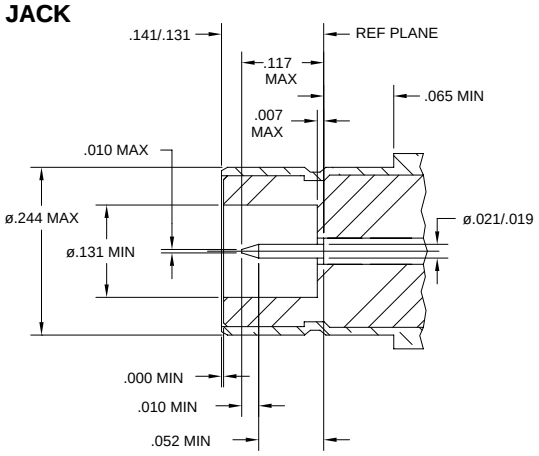

Downloaded from Arrow.com.

75 ohm Coaxial Connectors

Fig. 1

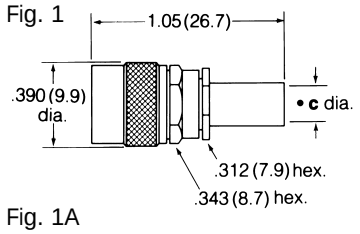

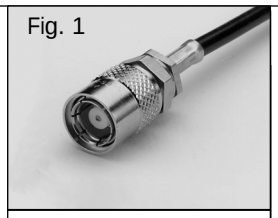

Fig. 1A

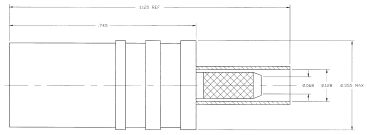

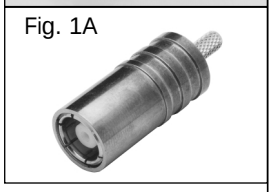

75Ω SMB Plug
Braid Crimp/Solder Female Contact
903-152P-71S7 Positive Lock for 735A Cable
903-152P-71S Positive Lock for RG-180, 195
Gold Plated Body, Nickel Plt. Cpl. Ring
903-152P-71S3 Positive Lock for RG-179
Gold Plated Body, Nickel Plt. Cpl. Ring
903-574P-71S Positive Lock for RD-179
903-575P-71S Positive Lock for RG-179

Fig. 2

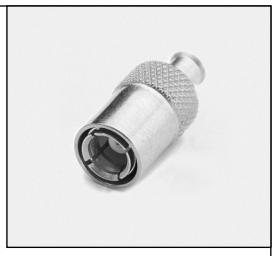

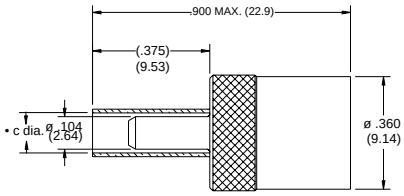

75Ω SMB Plug
Braid Crimp/Solder Female Contact/Gold Plt.
903-502P-71S for RG-179, Nickel Plated Body

Fig. 3

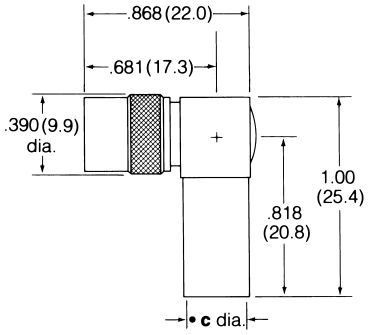

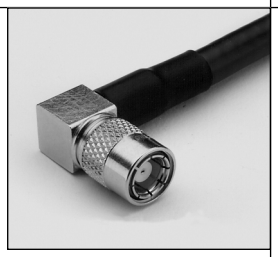

75Ω SMB Angle Plug
Braid Crimp/Solder Female Contact
903-495P-71A Positive Lock for Belden 1694A RG-6 Type,
Gold Plated Body, Nickel Plt. Cpl. Ring

Fig. 4

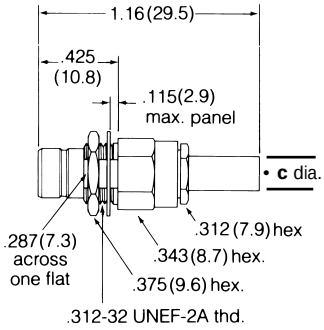

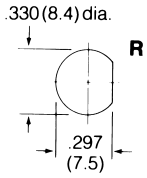

75Ω SMB Bulkhead Jack
Braid Crimp/Solder
Male Contact/Gold Plated
903-108J-71S for RG-179

75 ohm SMB PLUGS, ANGLE PLUGS & BULKHEAD JACKS

Cable RG-/U	Connector Description	Cable Attachment Outer	Cable Attachment Inner	c Dia In. (mm)	MTG Hole	CAI	Plt.	Ins.	Notes	Amphenol Number	Fig.
RG-179	Bulkhead Jack	Crimp	Solder	.128(3.3)‡	R	C60	P9	D1	Gold Plated Body	**903-108J-71S**	4
	Plug (Positive Lock)	Crimp	Solder	.128 (3.3)	—	C60	P9	D1	Nickel Plt coupling Ring	**903-152P-71S3**	1
	Plug (Positive Lock)	Crimp	Solder	.128 (3.3)	—	C60	P9	D1	Nickel Plt coupling Ring	**903-575P-71S**	1A
RD-179	Plug (Positive Lock)	Crimp	Solder	.128 (3.3)	—	C60	P9	D1	Nickel Plt coupling Ring	**903-574P-71S**	1A
RG-174, 179, 187, 188, 316	Plug	Crimp	Solder	.128(3.3)‡	—	C60	PCF	D1	Nickel Plated Body Nickel Plt Coupling Ring	**903-502P-71S**	2
RG-180, 195	Plug (Positive Lock)	Crimp	Solder	.180(4.6)‡	—	C60	PCF	D1	Gold Plated Body Nickel Plt Coupling Ring	**903-152P-71S**	1
Amphenol 621-4460-75	Angle Plug (Positive Lock)	Crimp	Solder	.300(7.6)‡	—	C61	PCF	D1	Gold Plated Body	**903-495P-71A**	3
735A	Plug (Positive Lock)	Crimp	Solder	.175(4.4)	—	C60	P9	D1	Gold Plated Body	**903-152P-71S7**	1

‡ i.d. of outer crimp ferrule

Downloaded from Arrow.com.

75 ohm Coaxial Connectors

Fig. 1

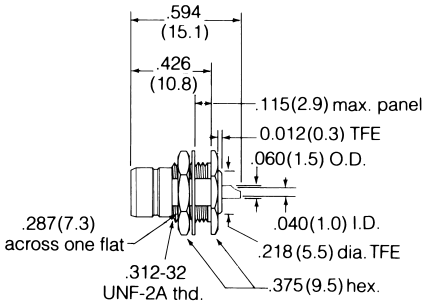

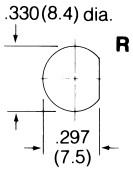

75Ω SMB Bulkhead Receptacle/Rear Mount
Male Contact/Solder Cup Terminal
903-382J-71R Gold Plated

Fig. 2

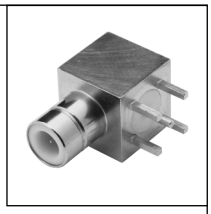

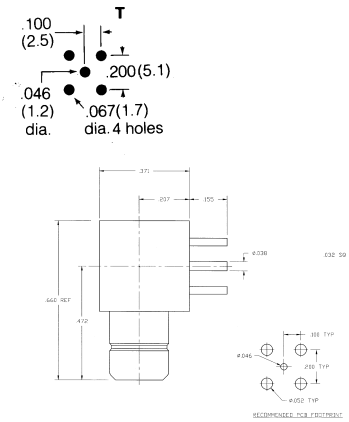

75Ω SMB Right Angle PCB Receptacle
903-585J-71A Gold Plated

Fig. 3

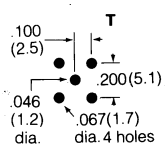

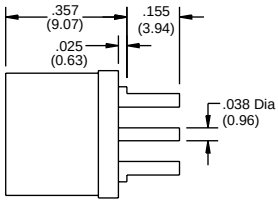

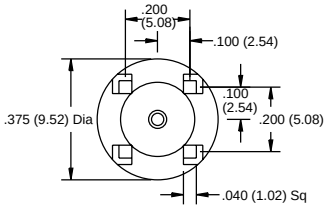

75Ω SMB PCB Plug Receptacle
Female Contact/Four Legs
903-522P-71P Gold Plated

Fig. 4

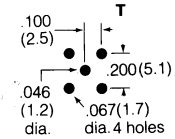

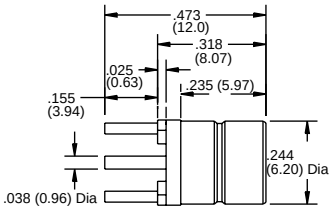

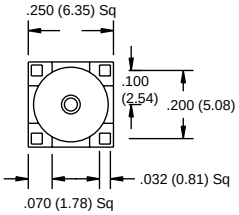

75Ω SMB PCB Jack Receptacle
Male Contact/Four Legs
903-523J-71P Gold Plated

75 ohm SMB BULKHEAD & PRINTED CIRCUIT BOARD RECEPTACLES

Connector Description	Terminal Type	MTG Hole	Plt.	Ins	Construction Notes	Amphenol Number	Fig.
Bulkhead Jack Receptacle, Rear Mount	Solder Cup	R	P11	D1	Gold Plated/Captive Contact	903-382J-71R	1
PCB Plug Receptacle/Four Legs	Blunt Post	T	P11	D1	Gold Plated/Captive Contact	903-522P-71P	3
PCB Jack Receptacle/Four Legs	Blunt Post	T	P11	D1	Gold Plated/Captive Contact	903-523J-71P	4
PCB R/A Jack Receptacle/Four Legs	Blunt Post	T	P11	D1	Gold Plated/Captive Contact	903-585J-71A	2

Downloaded from Arrow.com.

75 ohm High Density Coaxial Connectors

Amphenol high density 75 ohm 903 Series SMB connectors conform to the requirements of MIL-C-39012 and the interface is in compliance with MIL-STD-348.

Features/Benefits

- Broadband capability through 4 GHz combines with compact, space saving design.
- Can easily be identified by their red Teflon insulators.
- Guided entry sleeve for positive mating.
- Closed entry contact to prevent "slide-by".
- Full range of high density SMB connector configurations is available, including end launch, printed circuit board and cable connectors.
- Series gives design engineers options in applications where physical space is limited.

SPECIFICATIONS

ELECTRICAL

Impedance	75 ohms
Frequency range	0-4 GHz with low reflection
Voltage rating for RG-188/U cables	Sea level: 335 volts 70,000 ft: 85 volts
Dielectric withstanding voltage	750 VRMS, RG-196 type 1000 VRMS, RG-188 type
VSWR straight right angle connectors	735A type 1.25 + .04 f (GHz) 1.35 + .04 f (GHz)
Contact resistance	Center contact: initial, 6.0 milliohms; After environmental, 8.0 Outer contact: initial, 1.0 milliohms; After environmental, 1.5 Braid to body: initial, 1.0 milliohms; After environmental, N/A
Insulation resistance:	1000 megohms min.
RF leakage	-55 dB min. @ 2 - 3 GHz
Insertion loss: straight rt. angle	 0.30 dB @ 1.5 GHz 0.60 dB @ 1.5 GHz

MATERIAL

Bodies	Brass per QQB-626 or zinc per ASTM B86-71, as specified, nickel (or gold) plated as listed
Center contacts	beryllium copper, gold plated
Outer contact	Nickel or gold plated as listed.
Crimp ferrules	Annealed copper alloy
Insulators	TFE - Red for I.D.

MECHANICAL

Mating	75 ohm snap-on coupling, per MIL-STD-348
Engagement forces	Initial 14 lbs. max. engagement. After 500 matings, 14 lbs. max engagement and disengagement. 2 lbs. min. disengagement.
Connector affixment to cable	Braid and jacket: hex crimp.
Cable affixment to center contact	Solder or crimp
Contact captivation	All types, except as noted
Cable retention	Equal to breaking strength of cable employed
Connector durability	500 mating and unmating cycles min.

ENVIRONMENTAL

Temperature range	-65°C to + 165°C
Thermal shock	MIL-STD-202 method 107 (test cond. B) except high temp test @ + 200°C
Vibration	MIL-STD-202 method 204, snap-on (test cond. B) (15G's)
Shock	MIL-STD-202 method 213, snap-on (test cond. B) 75 G's @ 6 milliseconds 1/2 sine.
Corrosion	MIL-STD-202 method 101 (test cond. B) 5% salt solution.

* These characteristics are typical and may not apply to all connectors.

PLUG

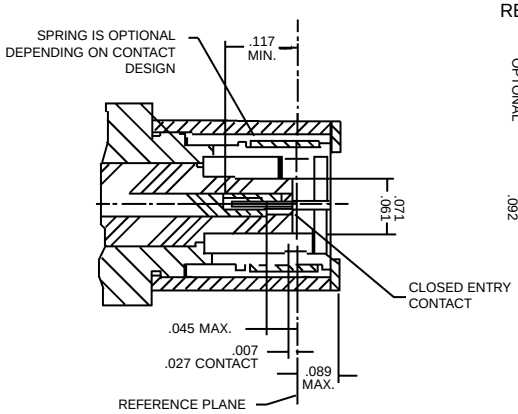

JACK

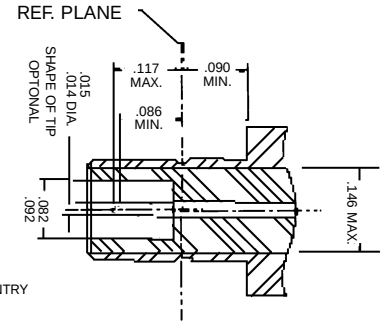

Downloaded from Arrow.com.

75 ohm High Density Coaxial Connectors

Fig. 1

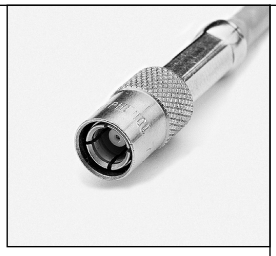

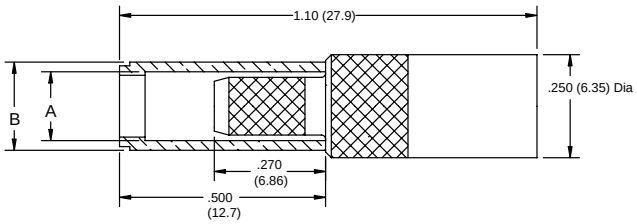

75Ω SMB Plug
903-516P-71S for Type 735A
903-536P-71S for RG-179
Nickel Plated, Gold Plated Contact

Fig. 2

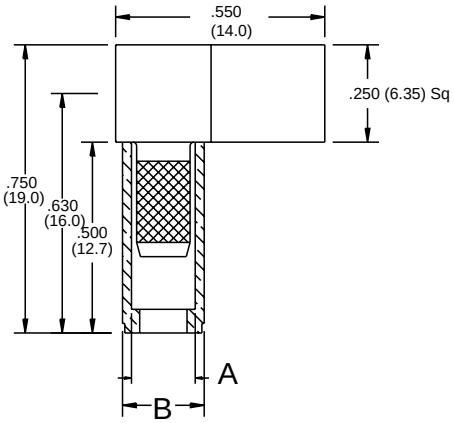

75Ω SMB Angle Plug
903-517P-71A for Type 735A
903-535P-71A for RG-179
Nickel Plated, Gold Plated Contact

75 ohm SMB PLUGS & ANGLE PLUGS

Cable RG-/U	Connector Description	Cable Attachment		c Dia		CAI	Plt.	Ins.	Notes	Amphenol Number	Fig.
		Outer	Inner	A	B						
179	Plug	Crimp	Solder	.128(3.3)	.152(3.86)	C60	PCF	D32	Nickel Plated Body	903-536P-71S	1
	Angle Plug	Crimp	Solder	.128(3.3)	.152(3.86)	C61	PCF	D32	Nickel Plated Body	903-535P-71A	2
735A Type	Plug	Crimp	Solder	.167(4.24)	.214(5.43)	C60	PCF	D32	Nickel Plated Body	903-516P-71S	1
	Angle Plug	Crimp	Solder	.167(4.24)	.214(5.43)	C61	PCF	D32	Nickel Plated Body	903-517P-71A	2

Downloaded from Arrow.com.

75 ohm High Density Coaxial Connectors

Fig. 1

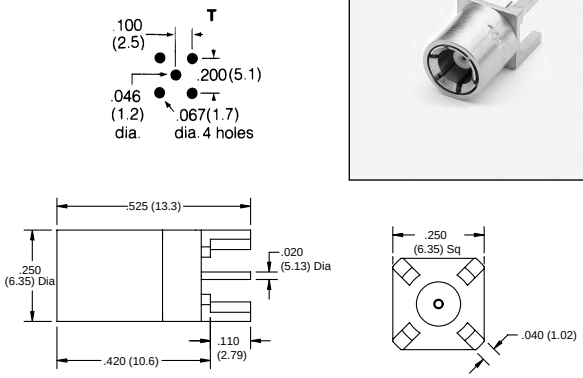

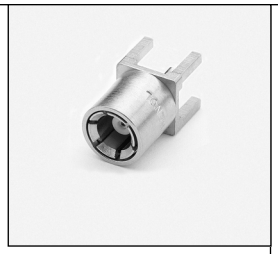

75Ω SMB PCB Slide-on Plug Receptacle
Female Contact/Blunt Post Terminal
903-524P-71P Gold Plated
TFE Fluorocarbon, Red Insulator
Gold Plated Contact

Fig. 2

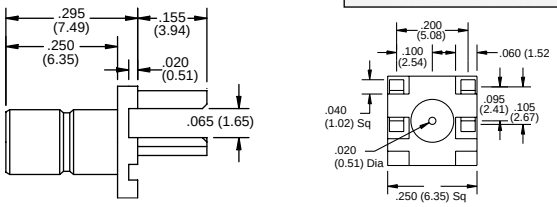

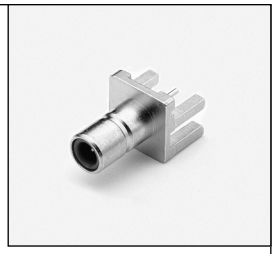

75Ω SMB PCB End Mount Jack Receptacle
Male Contact/Blunt Post Terminal
903-518J-71P Gold Plated
TFE Fluorocarbon, Red Insulator
Gold Plated Contact

Fig. 3

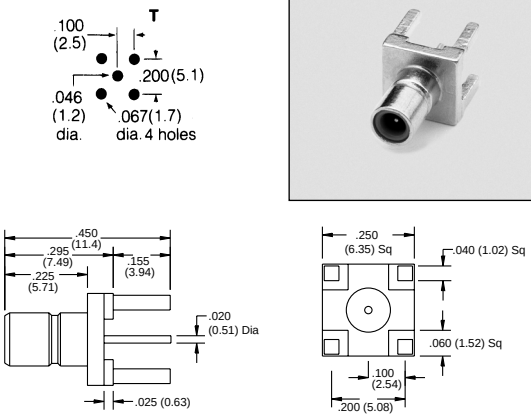

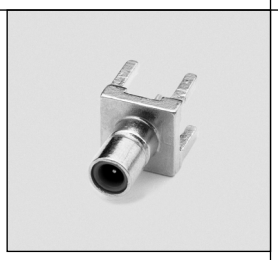

75Ω SMB PCB Jack Receptacle
Male Contact/Blunt Post Terminal
903-512J-71P Gold Plated
TFE Fluorocarbon, Red Insulator
Gold Plated Contact

Fig. 4

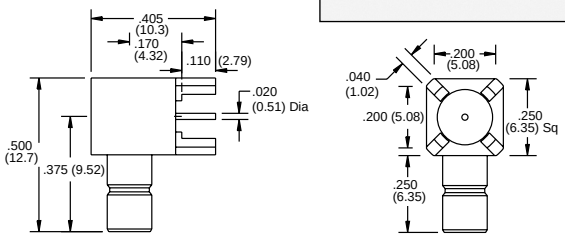

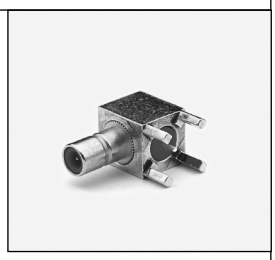

75Ω SMB PCB Angle Jack Receptacle
Male Contact/Blunt Post Terminal
903-519J-71P Gold Plated Body
TFE Fluorocarbon, Red Insulator
Gold Plated Contact

75 ohm SMB PRINTED CIRCUIT BOARD RECEPTACLES

Connector Description	Terminal Type	MTG Hole	Plt.	Ins	Construction Notes	Amphenol Number	Fig.
PCB Slide-on Plug Receptacle/Four Legs	Blunt Post	T	PCF	D32	Gold Plt. Body/Red TFE Ins.	**903-524P-71P**	1
PCB End mount Jack Receptacle/Four Legs	Blunt Post	—	PCF	D32	Gold Plt. Body/Red TFE Ins.	**903-518J-71P**	2
PCB Jack Receptacle/Four Legs	Blunt Post	T	PCF	D32	Gold Plt. Body/Red TFE Ins.	**903-512J-71P**	3
PCB Angle Jack Receptacle/Four Legs	Blunt Post	T	PCF	D32	Gold Plt. Body/Red TFE Ins.	**903-519J-71P**	4

Downloaded from Arrow.com.