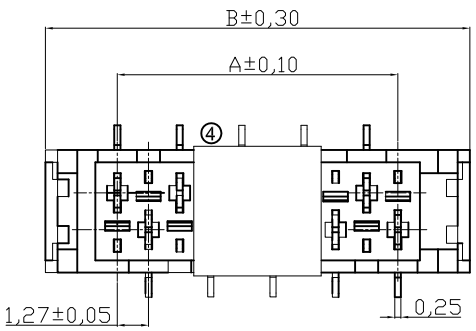

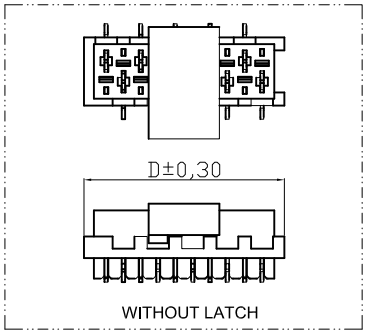

NOTES:

1.Insulation : High Temperature Plastci UL 94-0
Color Red
2.Contact : Phosphor Bronze
3.Plating : Matte Tin plated over Nickel
4.Contacts type: SMT Type
5.Packing: Reel packing

A-32-xx M-13 x x

latch option:
0= without latch
L= with latch

0: Plastic reel
③ R: Paper reel *
* On request

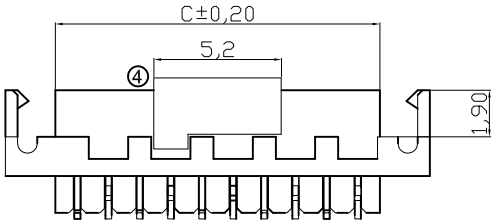

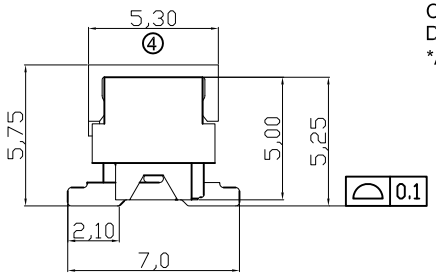

A= 1.27x No. of Spaces
B= A + 5.87
C= A +1.80
D= A +3.27
*Available in 4~26 circuits

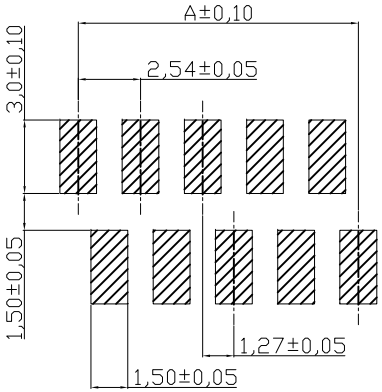

Recommended PCB Layout

RoHS compliant
Unit: mm

Scale	Free
TOLERANCE	
.X	±0.30
.XX	±0.20
.XXX	±0.10
DIM	TOL
X.°	±1°
X.X°	±X°
Angle	TOL

Id.	Modification	Date	Name
⑤	Add solder profile on page 2	15.08.2014	Amy
④	Update cap dimensions on page 1 Update tape reel drawing on page 2	15.04.2014	Amy
③	Add remark *	20.07.2012	Lucas
②	Add paper reel packing drawing	16.03.2011	Rale
①	Drawn	05.08.2009	Dean

	Date	Name
Drawn	05.08.2009	Dean
Approved	15.08.2014	Amy

ASSMANN WSW components

Customer-No.

ASSMANN WSW-No.
A-32-xx M-13xx

Drawing-No.
ASS 3633 CO

rev05

Replace

SHEET
1 / 3

SV2275

Downloaded from Arrow.com.

Recommended IR Reflow Temperature Profile

1. Using Typical Solder Paste

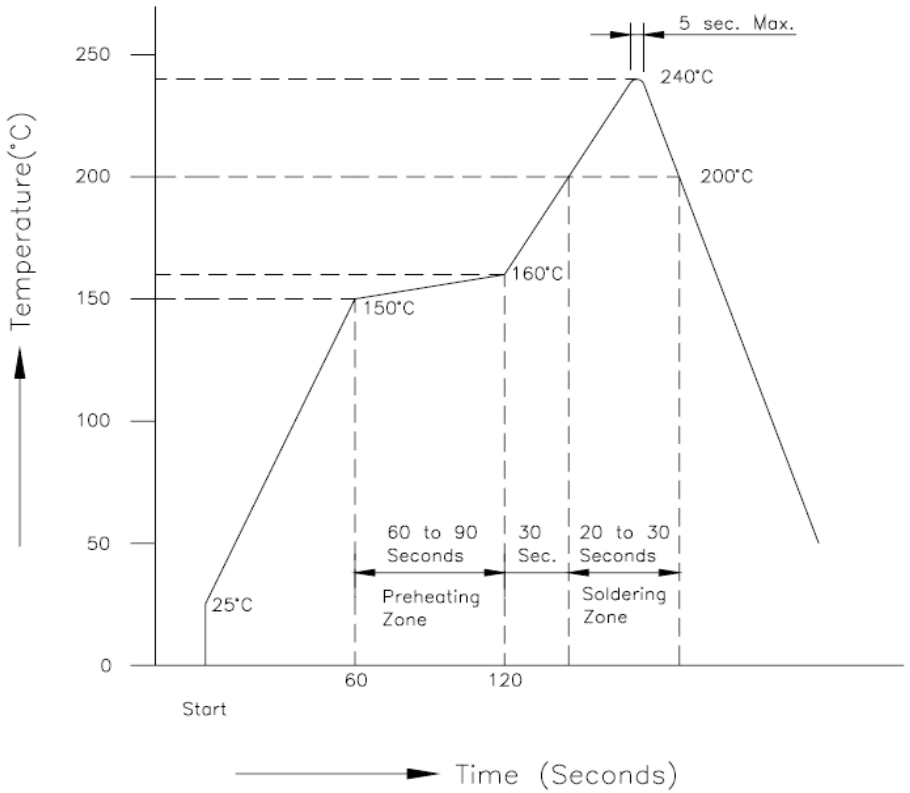

2. Using Lead-Free Solder Paste

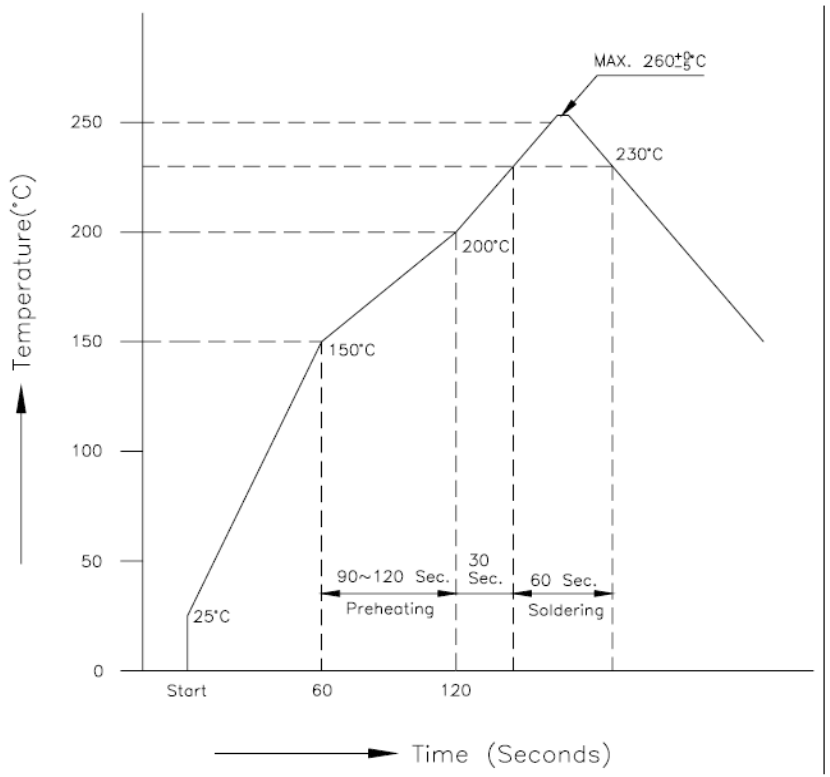

RoHS compliant

Unit: mm

Scale	Free
TOLERANCE	
.X	±0.30
.XX	±0.20
.XXX	±0.10
DIM	TOL
X.°	±1°
X.X°	±X°
Angle	TOL

Id.	Modification	Date	Name
⑤	Add solder profile on page 2	15.08.2014	Amy
④	Update cap dimensions on page 1 Update tape reel drawing on page 2	15.04.2014	Amy
③	Add remark *	20.07.2012	Lucas
②	Add paper reel packing drawing	16.03.2011	Rale
①	Drawn	05.08.2009	Dean

	Date	Name
Drawn	05.08.2009	Dean
Approved	15.08.2014	Amy

ASSMANN WSW components

Customer-No.

ASSMANN WSW-No. A-32-xx M-13xx

Drawing-No. ASS 3633 CO rev05

Replace

SHEET 2 / 3

SV2275

Downloaded from Arrow.com.

④

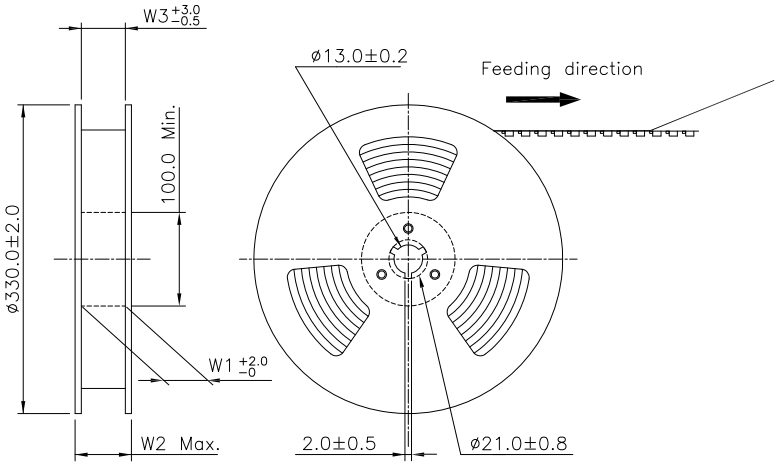

NOTES:

1. 10 sprocket hole pitch cumulative tolerance ±0.20mm.
2. Carrier camber not to exceed 1 mm in 100 mm.
3. Material :Transparent Anti−static Polysyrene.
4. All dimensions meet EIA−481−3 requirements.
5. Thickness : 0.40±0.05mm.
6. Packing length per 22" Reel : 30.6 Meters.
7. Component load per 13" Reel : 800 pcs.

Without Latch	With Latch	Dimension					Packing (Reel/Caton)
Circuits		E	F	W1	W2	W3	
4~8	4~8	24.0	–	24.5	30.5	24.5	9
10~14	10~12	32.0	28.40	32.5	38.5	32.5	7
16~24	14~20	44.0	40.40	44.5	50.5	44.5	5
26	22~26	56.0	52.40	56.5	62.5	56.5	4

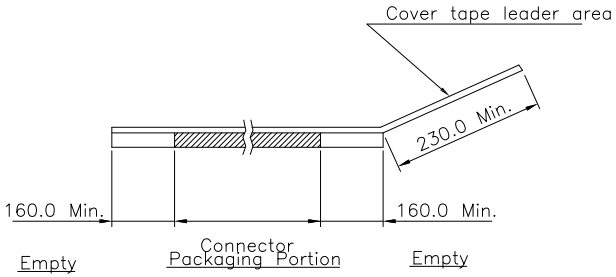

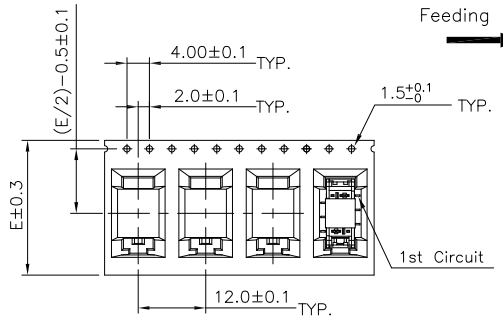

For With Latch Type

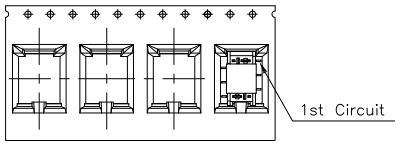

For Without Latch Type

WIDTH : 24 mm Carrier

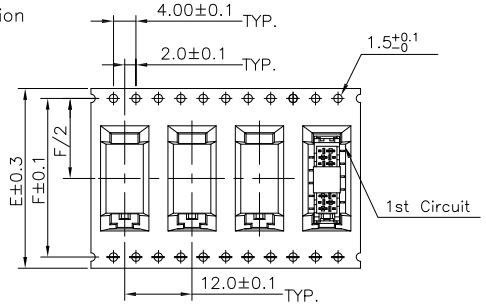

For With Latch Type

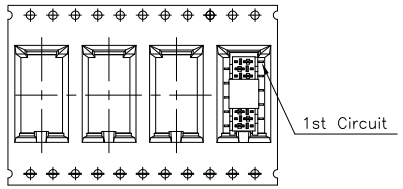

For Without Latch Type

WIDTH : 32,44,56 mm Carrier

RoHS compliant
Unit: mm

Scale	Free
TOLERANCE	
.X	±0.30
.XX	±0.20
.XXX	±0.10
DIM	TOL
X.°	±1°
X.X°	±X°
Angle	TOL

Id.	Modification	Date	Name
⑤	Add solder profile on page 2	15.08.2014	Amy
④	Update cap dimensions on page 1 Update tape reel drawing on page 2	15.04.2014	Amy
③	Add remark *	20.07.2012	Lucas
②	Add paper reel packing drawing	16.03.2011	Rale
①	Drawn	05.08.2009	Dean

	Date	Name
Drawn	05.08.2009	Dean
Approved	15.08.2014	Amy

ASSMANN WSW components

Customer-No.

ASSMANN WSW-No.
A-32-xx M-13xx

Drawing-No.
ASS 3633 CO

rev05

Replace

SHEET
3 / 3

SV2275

Downloaded from Arrow.com.