JOY-3000-2508

3000 series

Robust proportional fingertip controllers • non-contacting Hall effect technology

DISTINCTIVE FEATURES

One, two or three axis
Analog - PWM
CAN J1939 & CANopen
Low profile less than 20 mm below panel depth*
5 V or 3.3 V operation
Metal mechanism

ENVIRONMENTAL SPECIFICATIONS

- Operating Temperature: -25 °C to +70 °C
- Storage Temperature: -40 °C to +70 °C
- Sealing: IP66 (above panel subject to handle and final specification)
- EMC Immunity Level: EN61000-4-3 (extended)
- EMC Emissions Level: EN61000-6-3:2001, CISPR 22:2005, Class B 30 MHz-11GHz
- ESD: EN61000-4-2 (extended)

ELECTRICAL SPECIFICATIONS

- Output Voltage Range: ±10% x V to ±50% x V
- Output at Center: V/2 ±(5% x gain)
- Power Supply: 5 V ±0.5 V transient free; 3.3 V ±0.1 V (configuration 2)
- Output impedance: 10 Ω
- Overvoltage max: +20 V

MECHANICAL SPECIFICATIONS

- Operating Force: 1.3 N (2.86 lbf) (Dependant on configuration)
- Maximum Load: 400 N (89.921 lbf) (subject to handle)
- Mechanical Angle of Movement: 36° X & Y axis (subject to limiter); 50° Z axis (subject to handle)
- Expected Mechanical Life: 10 million lifecycles
- Mass/weight: 100 g (3.53 oz) nominal
- Lever Action (centering): Spring

The company reserves the right to change specifications without notice.

*Non CAN options only

APEM

Downloaded from Arrow.com.

3000 series

Robust proportional fingertip controllers • non-contacting Hall effect technology

MATERIALS

- Shaft: Stainless steel
- Boot: Neoprene
- Handles:
  BL, E, Q, AL - Nylon
  AR - Aluminum
  K - ABS
  T - Stainless steel

CONNECTIONS

The analog and PWM joystick is fitted, as standard, with 150mm long BS6360 rated cables and an industry standard 2.54mm pitch connector(s). Further non-standard connectors and cable options are available upon request.

CONFIGURATIONS 1 & 2

Joysticks are supplied with a seven way connector as standard. If the joystick is specified with a pushbutton handle, the connector will be nine way.

PIN	FUNCTION	COLOR
1	0V	Black
2	Center Tap Reference	Green
3	Z Axis Output - Where Specified	Purple
4	Y Axis Output	Yellow
5	X Axis Output- Where Specified	Blue
6	+V	Red
7	Center Detect	Orange
8	Pushbutton	Orange
9	Pushbutton	Orange

CONFIGURATIONS 3 & 4

Joysticks are supplied with two completely independent cable assemblies for a truly dual system.

PIN	FUNCTION	COLOR
1	0V	Black
2	Center Tap Reference	Green
3	No connection	
4	Y Axis Output	Yellow
5	X Axis Output- Where Specified	Blue
6	+V	Red
7	No connection	

For details on configuration 5 pinout, please contact Customer Support.

TERMINATION (CAN OUTPUTS ONLY)

- 3000 series joysticks configured with CAN outputs are supplied with on-board 6 way connector
- Header specifications: JST S6B-PH-K-S(LF)(SN) - 6 position, 2mm pitch, single row header (Fig 1)

Fig. 1

Pin 1 7 to 35Vdc Power Supply
Pin 2 0V Ground
Pin 3 ID Select MSB / Node ID Select MSB
Pin 4 ID Select LSB / Node ID Select LSB
Pin 5 CAN HI
Pin 6 CAN LO

JST S6B-PH-K-S(LF) (SN) header

HEADER PINOUT AND MATING WIRE HARNESS COLOR DEFINITION

HEADER PINOUT		
JST B6B-PH-S(LF) (SN) HEADER PIN #	CAN BUS FUNCTION	CANOPEN FUNCTION
1	Supply power (7 to 35 VDC)	Supply power (7 to 35 VDC)
2	Ground	Ground
3	ID select MSB	Node ID select MSB
4	ID select LSB	Node ID select LSB
5	CAN Hi	CAN Hi
6	CAN Lo	CAN Lo

Downloaded from Arrow.com.

MOUNTING)

When mounting the joystick, care should be taken to site it in a position that does not make it vulnerable to damage when in use. If the joystick is intended for use in a handheld enclosure then care must be taken to protect the joystick from damage caused by dropping. Basic precautions such as mounting it at the lightest end of the enclosure so it doesn't hit the ground first or by protecting it with a guard should always be implemented for long term reliability.

The body of the joystick, on the underside of the panel, must not be subject to water spray, excessive humidity or dust. Some handles may be larger than some panel cut-outs. This may restrict the choice of mounting and bezel options. Please refer to APEM for assistance.

DROP-IN MOUNT CUT-OUT AND INSTALLATION

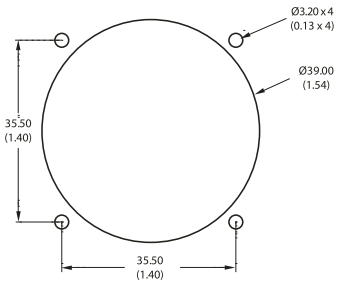

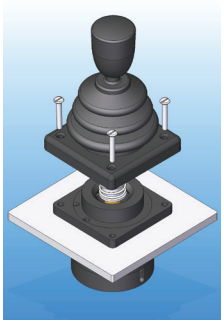

- The joystick is dropped into the panel cut-out.
- For panel thickness of <3 mm, m3 x 16 countersunk machine screws are recommended.
- Please note: Image shows a square bezel, a circular bezel is also available for this option..

OPTION A SUB-MOUNT CUT-OUT AND INSTALLATION

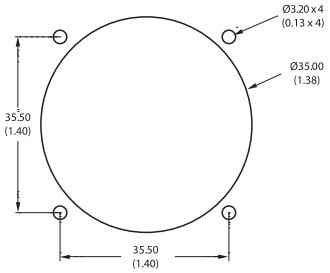

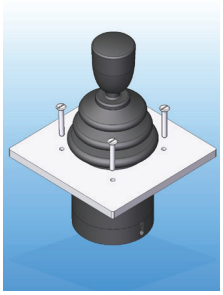

- When mounted this way the panel acts as the bezel and no separate bezel is needed.
- M3 machine screws are recommended..

OPTION B SUB-MOUNT CUT-OUT AND INSTALLATION

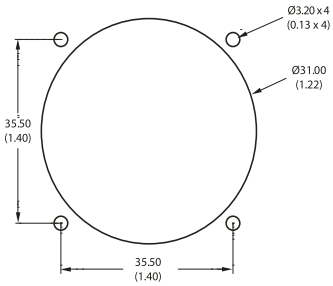

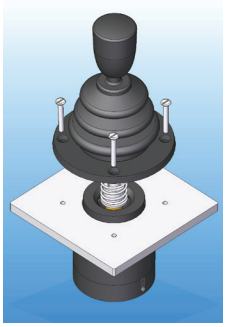

- The joystick is mounted beneath the panel and the base of the boot must be brought through the panel cut-out and held in place with the circular bezel.
- For panel thickness of <3 mm, m3 x 16 countersunk machine screws are recommended.

NOTES:

* 3000 series has slotted mounting holes - allows compatibility with mounting pitches of 32.25 mm to 35.80 mm.

1. Dimensions are in mm/(inch).
2. The dimensions shown are for generic 3000 series with E type handle. For specific dimensions of this or any other configuration please refer to APEM.
3. When sub panel mounting, great care should be taken not to damage the boot, or any of the mechanism under the boot.

All panel cut-outs should be free from sharp edges and debris that may damage the boot.

Downloaded from Arrow.com.

3000 series

Robust proportional fingertip controllers • non-contacting Hall effect technology

BUILD YOUR PART NUMBER

3 — ___ — ___ — ___

SERIES

CONFIGURATION

1	Standard
2	3.3V Operation
3	Dual Outputs
4	Inverse Dual Outputs
5	PWM*
6	CAN J1939*
7	CANopen*

GAIN

10	±10%xV
25	±25%xV
30	±30%xV
40	±40%xV*
50	±50%xV

LIMITER

A	Single Axis
C	Cross
D	Diamond
R	Round
S	Square
X	X Type

___ — ___ — ___

HANDLE*

BL	Round
E	Conical
Q	Skirted
AK	Pushbutton
AL	Third Axis

*For more handles see next pages

BEZEL

0	None
4	Circular (below panel)
6	Square (drop-in)
7	Circular (drop-in)
8	Square (drop-in) including wrap around gaiter
9	Circular (below panel) including wrap around gaiter

MODIFIER

00	None
20	Guided Feel

NOTES :
* For output options 05, 06 and 07 40% gain is the default.
Standard option availability : The following table shows which permutations of options are possible.

CONFIGURATION	CT	CD	AXIS			SUPPLY		GAIN					LIMITERS						ALL HANDLES	ALL BEZELS
			X	Y	Z	3.3V	5V	10	25	30	40	50	A	C	D	R	S	X		
1	✓	✓	✓	✓	✓	x	✓	✓	✓	✓	✓	✓	✓	✓	✓	✓	✓	✓	✓	✓
2	x	x	✓	✓	✓	✓	x	x	x	x	x	✓	✓	✓	✓	✓	✓	✓	✓	✓
3	✓	x	✓	✓	✓	x	✓	✓	✓	✓	✓	✓	✓	✓	✓	✓	✓	✓	✓	✓
4	✓	x	✓	✓	✓	x	✓	✓	✓	✓	✓	✓	✓	✓	✓	✓	✓	✓	✓	✓
5	x	x	✓	✓	✓	x	✓	x	x	x	x	x	✓	✓	✓	✓	✓	✓	✓	✓

Downloaded from Arrow.com.

3000 series

Robust proportional fingertip controllers
non-contacting Hall effect technology

WITH HANDLE OPTION E

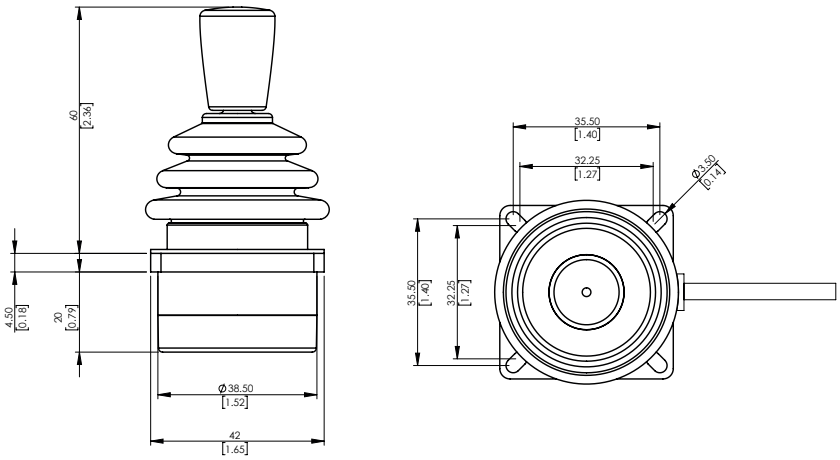

WITH CAN CONFIGURATION

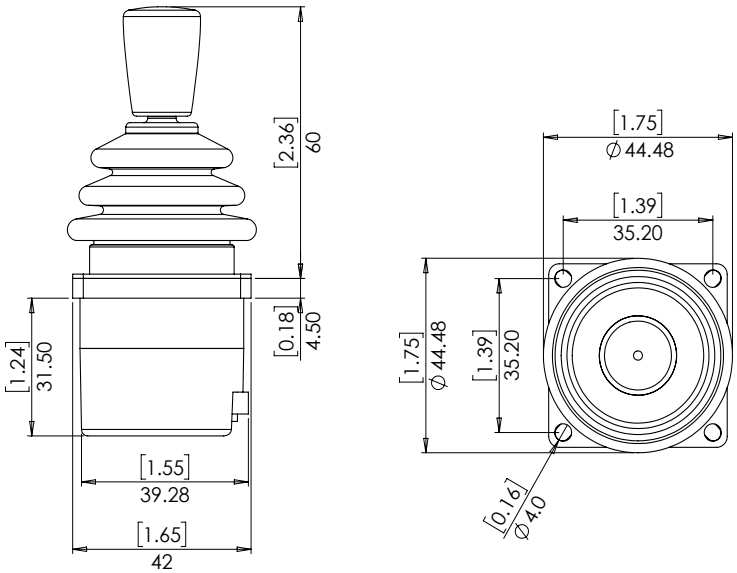

Downloaded from Arrow.com.

3000 series

Robust proportional fingertip controllers • non-contacting Hall effect technology

HANDLE OPTIONS

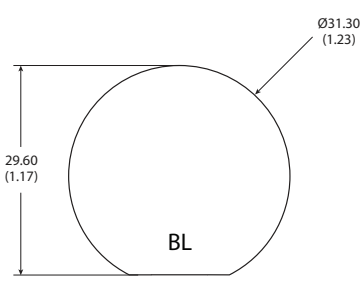

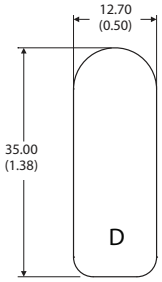

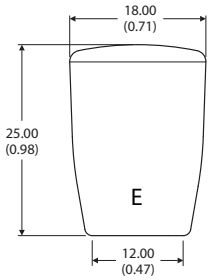

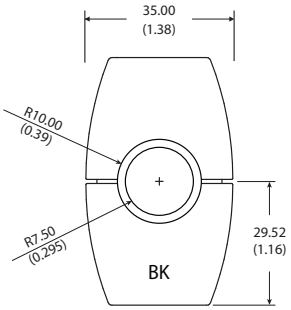

MATERIAL	Nylon	Aluminum	Nylon	ABS
FINISH	Sparked Matt	Anodized	Sparked Matt	Sparked Matt
STANDARD COLOR	Black	Black	Black	Black
NOTES				Uses APEM IA Switch
IP66 (with option 8 bezel)			X	

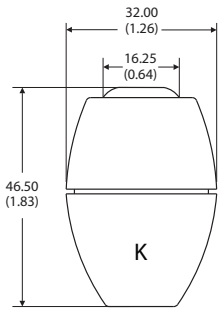

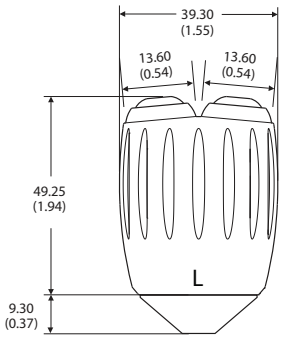

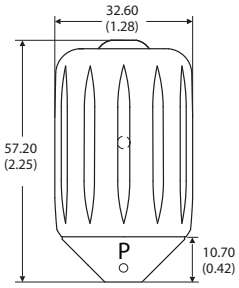

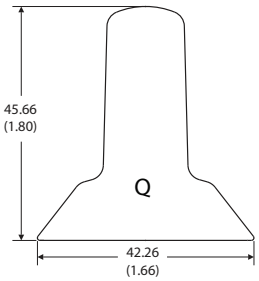

MATERIAL	ABS	Aluminum	Aluminum	Nylon
FINISH	Sparked Matt	Anodized	Anodized	Sparked Matt
STANDARD COLOR	Black	Black	Black	Black
NOTES	Uses APEM IS Switch	Z axis functionality single output only	Uses APEM IS Switch Z axis functionality	
IP66 (with option 8 bezel)	X			X

Downloaded from Arrow.com.

HANDLE OPTIONS (CONTINUED)

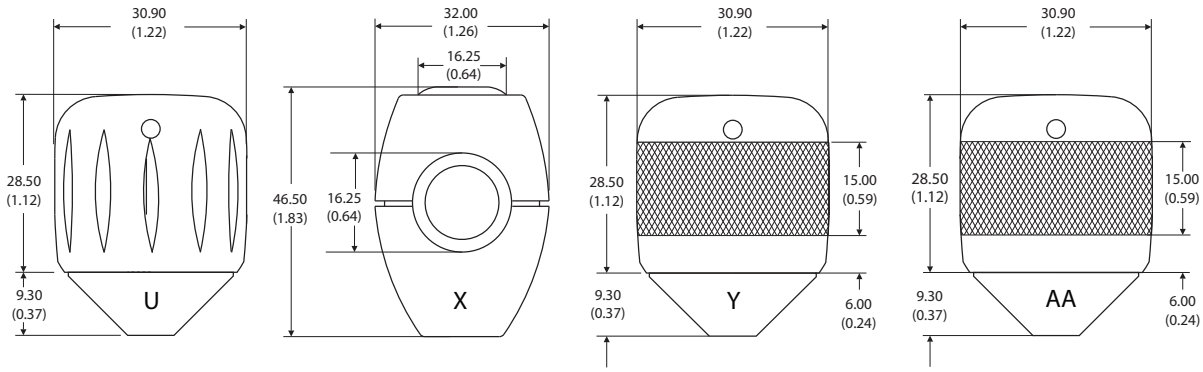

MATERIAL	Aluminum	ABS	Aluminum	Aluminum
FINISH	Anodized	Sparked Matt	Anodized with Diamond Knurl	Anodized with Diamond Knurl
STANDARD COLOR	Black	Black	Black	Black
NOTES		Uses APEM IS Switch	Z axis functionality	
IP66 (with option 8 bezel)				

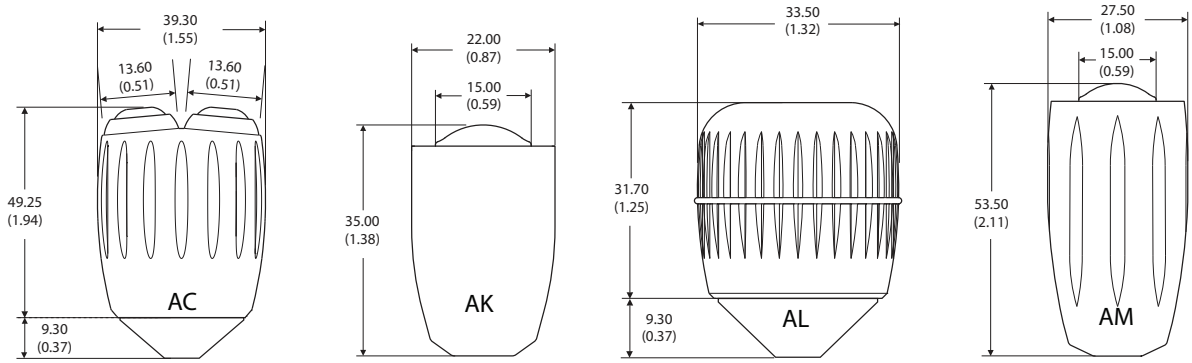

MATERIAL	Aluminum	Aluminum	Nylon	Aluminum
FINISH	Anodized	Anodized	Sparked Matt	Anodized
STANDARD COLOR	Black	Black	Black	Black
NOTES	Uses APEM IS Switch	Uses APEM IA Switch	Z axis functionality	Uses APEM IA Switch
IP66 (with option 8 bezel)			X	

Downloaded from Arrow.com.

3000 series

Robust proportional fingertip controllers • non-contacting Hall effect technology

HANDLE OPTIONS (CONTINUED)

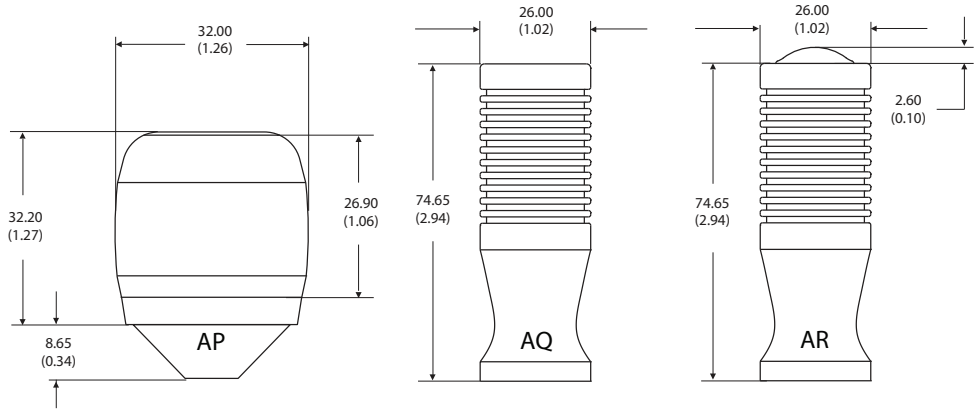

MATERIAL	Santoprene over Nylon	Aluminum	Aluminum
FINISH	Soft Touch	Anodized	Anodized
STANDARD COLOR	Black	Black	Black
NOTES	Z axis functionality		Uses APEM IA Switch
IP66 (with option 8 bezel)		X	X

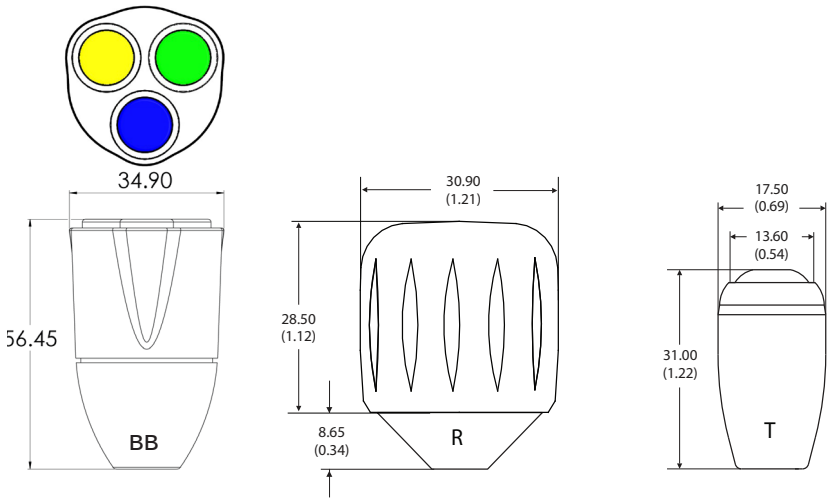

MATERIAL	Nylon	Aluminum	Stainless Steel
FINISH	Sparked Matt	Anodized	Natural
STANDARD COLOR	Black	Black	Stainless Steel
NOTES	Uses APEM IL switch	Z axis functionality	Uses APEM IS Switch
IP66 (with option 8 bezel)			

Downloaded from Arrow.com.

VOLTAGE OUTPUT OPTIONS

SINGLE OUTPUT - CONFIGURATION 1

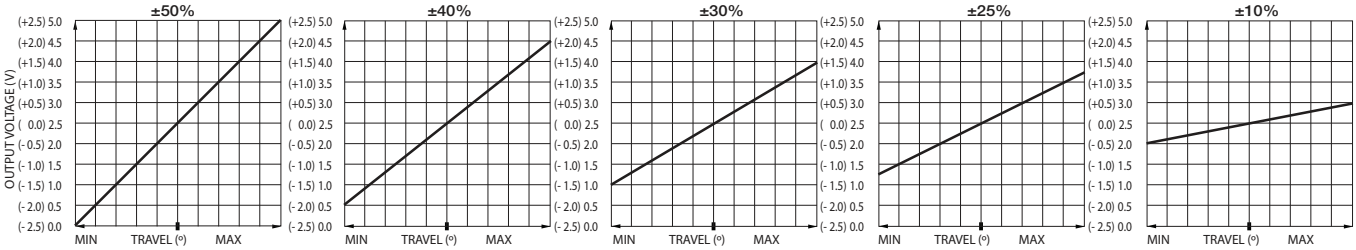

DUAL OUTPUT - CONFIGURATION 3

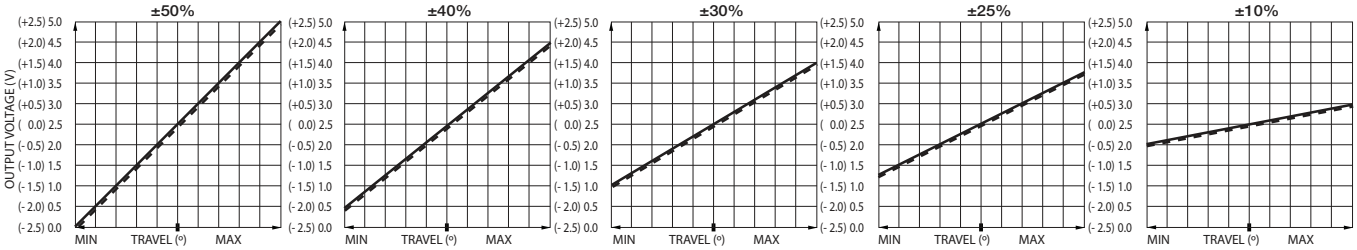

DUAL OUTPUT - CONFIGURATION 4

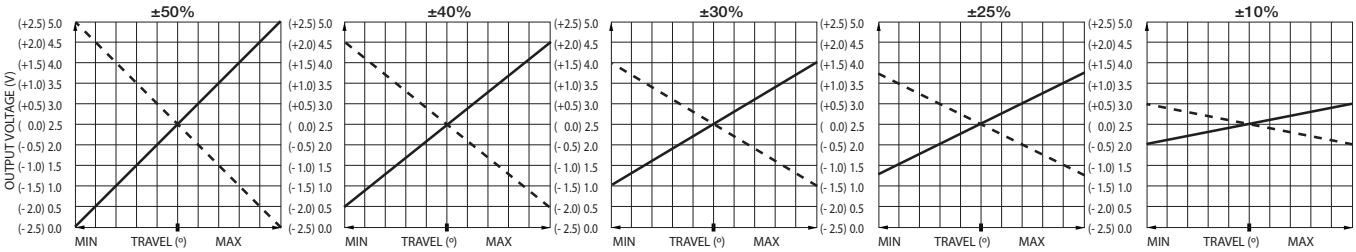

Output 1

Output 2

Downloaded from Arrow.com.

3000 series

Robust proportional fingertip controllers • non-contacting Hall effect technology

CAN J1939 INTERFACE SPECIFICATION

The 3000 Series joystick can be configured with a maximum of three axis and three buttons. All axis and button data are delivered on a CAN 2.0B compliant physical interface. Two additional signals allow configuration of the controller Source Address.
Controller messages are delivered per the SAE J1939-71 message protocol.

CAN 2.0B INTERFACE PARAMETERS

- Baud rate: 250 kbps
- Transmission repetition rate: 50ms
- BJMI/EJMI interval time: 20ms
- Terminating resistor: No

CAN MESSAGE PROTOCOL

- Primary Axis and button data on Basic Joystick Message 1 (BJM1):
  - Priority: 3
  - Base PGN: 0xFDD6
  - Source address: 0x16
  - Data field: 8 bytes
- Z-Axis data on Extended Joystick Message 1 (EJMI):
  - Priority: 3
  - Base PGN: 0xFDD7
  - Source address: 0x16
  - Data field: 8 bytes

CAN MESSAGE ADDRESSES

Alternate source addresses may be selected by grounding combinations of the PIN 3 and/or PIN 4.

CAN SOURCE ADDRESS	PIN 3	PIN 4
0x16 (default)	OPEN	OPEN
0x26	OPEN	Grounded
0x36	Grounded	OPEN
0x46	Grounded	Grounded

BJM1 DATA FIELD STRUCTURE:

START POSITION (BYTE/BIT)	LENGTH (BITS)	FUNCTION
1/1	2	Primary X-axis neutral position status
1/3	2	Primary X-axis left position status
1/5	2	Primary X-axis right position status
1/7 to 2/8	10	Primary X-axis position data
3/1	2	Primary Y-axis neutral position status
3/3	2	Primary Y-axis down position status
3/5	2	Primary Y-axis up position status
3/7 to 4/8	10	Primary Y-axis position data
6/5	2	Button 2 status
6/7	2	Button 1 status

EJM1 DATA FIELD STRUCTURE:

START POSITION (BYTE/BIT)	LENGTH (BITS)	FUNCTION
5/1	2	Primary Z-axis neutral position status
5/3	2	Primary Z-axis counter-clockwise position status
5/5	2	Primary Z-axis clockwise position status
5/7 TO 4/8	10	Primary Z-axis position data

Downloaded from Arrow.com.

CANOPEN INTERFACE SPECIFICATION

- Baud rate: 250 kbps
- Node ID: 20h
- Buttons: 1A0H (180H + NODE ID)
- Analog (axis) outputs: 2A0h (280h + Node ID)
- Heartbeat (500ms): 720h (700h + Node ID)
- Axis resolution: 8 bit
- Network Management: Auto start enabled

CANOPEN NODE ID SELECTION

Alternate NODE IDs may be selected by grounding the pin number.

NODE ID SELECT	PIN 3	PIN 4
20H (default)	OPEN	OPEN
21H	OPEN	Grounded
22H	Grounded	OPEN
23H	Grounded	Grounded

CANOPEN BUTTON OUTPUT CONFIGURATION

BUTTON STATUS IS TRANSMITTED IN THE ONE BYTE DATA FIELD OF FRAMES WITH AN IDENTIFIER OF 1A0 (DEFAULT)	
Identifier	Byte 0
1A0	Buttons (2:0)

CANOPEN ANALOG OUTPUT CONFIGURATION

EIGHT BIT ANALOG DATA IS TRANSMITTED IN THE THREE BYTE DATA FIELD OF FRAMES WITH AN IDENTIFIER OF 2A0 (DEFAULT)			
Identifier	Byte 0	Byte 1	Byte 2
2A0	A_IN0 (7:0)	A_IN1 (7:0)	A_IN2 (7:0)

Downloaded from Arrow.com.

3000 series

Robust proportional fingertip controllers • non-contacting Hall effect technology

CONFIGURATION

POWER SUPPLY

The 3000 series is designed to be powered by a regulated 5 V ± 0.5 V power supply. The outputs are ratiometric, making a stable, noise free, power supply essential. The 3.3 V version of the 3000 series requires a power supply accurate to ± 0.1 V.

The outputs are not ratiometric, the voltage gain is set to 50 % as standard, giving an output range from 0 to 3.3 V regardless of supply voltage. The power supply to the joystick should be carefully regulated to be within tolerance. Should the power supply change outside of the specified tolerances, permanent damage may occur.

MAGNETIC IMMUNITY AND SYSTEM DESIGN

The 3000 series incorporates internal magnetic screening to minimise the effect of external magnetic fields. Mounting or operating the joystick close to strong magnetic fields is not recommended. System designers should follow best practice when incorporating the 3000 series joystick into their products.

Care should be taken to decouple the power supply properly and to employ adequate EMC shielding.

CENTER DETECT (CD)

Where selected, (configuration 1 types) the output on this additional cable will be 0V while the joystick is inactive. Should either the X or Y outputs change outside of the center tolerance, indicating that the joystick has been operated, the center detect signal will switch to 5 V.

Within the joystick this output is pulled high by a 2K2 resistor and is decoupled by a 100 nF capacitor to 0 V.

This output is designed for use in applications requiring an enable/disable signal that is separate from the main wipers. It is not recommended for use as a safety feature or a method of “person-present“ detection.

CENTER TAP REFERENCE (CT)

Where selected, (configurations 1, 3 and 4) the joystick also outputs a center reference voltage that is set at 50% (±1%) of the supply voltage.

This output can be used to check the integrity of the power supply applied to the joystick. A reading on this output, outside of the specified tolerance suggests a problem with the power supply to the joystick.

The other purpose of this output is to act as a reference equal to the voltage output when the lever is at center.

Measuring the voltage outputs relative to CT rather than 0 V eliminates inaccuracies created by variation in supply voltage.

GAIN OPTIONS

The voltage output on the wipers, at full scale deflection is determined by the gain. The gain is expressed as a percentage of the voltage supplied. Therefore (assuming a 5 V supply) a joystick specified with ±2 5 % gain would yield 1.25 V at South, 2.5 V at center and 3.75 V at North.

A range of gain options are available as standard for configurations 1, 3 and 4.

All joysticks are supplied pre-set and no further calibration is needed throughout the lifetime of operation.

OUTPUT IMPEDANCE

The voltage outputs at center and at each end of travel are specified across an infinite load, with no current flowing.

The output impedance specified in the electrical specification should be taken into account when designing a system. Load resistance of less than 10 K Ohms is not recommended.

MECHANISM

The omni-directional mechanism utilizes an extremely robust ball-socket pivot. This construction yields an end product that is extremely resistant to vertical impact.

Furthermore it constantly withstands high pull, push, rotational or horizontal forces that the product may be subject to, during life.

SPRINGING

All 3000 series are offered sprung to center. The standard spring force requires 1.3 N (nominally) to off-center the joystick. The 3000 series may be specified with a lighter spring (1 N), or a stronger spring (1.6 N).

GUIDED FEEL

The 3000 series may also be specified with guided feel. A joystick with guided feel moves more readily towards the poles (N, S, E and W) and whilst it can still move away from the poles, the force required to do so is greater.

Unless specified otherwise, joysticks are supplied as standard without guiding.

This standard configuration allows the user to move the joystick anywhere within the limiter with the same force and without any bias.

Downloaded from Arrow.com.