Metallized Polypropylene Film EMI Suppression Capacitors for Harsh Environmental Conditions – F863, Class X2, 310 VAC (Automotive Grade)

Overview

The F863 is constructed of metallized polypropylene film, encapsulated with self–extinguishing resin in a box material recognized by UL 94 V–0. The F863 is ideal for harsh environmental conditions and meets the demanding Automotive Electronics Council's AEC–Q200 qualification requirements.

Applications

Typical applications include parallel connection and in series with the mains for indoor application, capacitive power supplies with special emphasis in automotive applications for severe ambient conditions.

Benefits

- Approvals: ENEC, UL, cUL, CQC
- Rated voltage: 310 VAC 50/60 Hz
- Capacitance range: 0.1 – 10.0 µF
- Lead spacing: 15.0 – 37.5 mm
- Capacitance tolerance: ±20%, ±10%
- Climatic category: 40/110/56, IEC 60068–1
- Tape & Reel in accordance with IEC 60286–2
- RoHS Compliant and lead–free terminations
- Operating temperature range of –40°C to +110°C
- 100% screening factory test at 1,900 VDC
- Automotive (AEC–Q200) grade

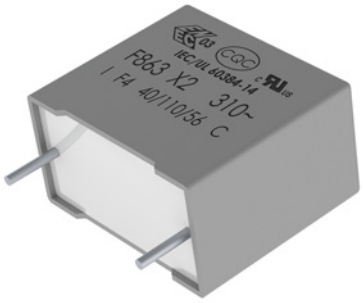

Simulator Tool and Lifetime Expectancy model available online:

K-SIM ***K-LEM***

Part Number System

F	863	B	C	104	M	310	C
Capacitor Class	Series	Lead Spacing (mm)	Size Code	Capacitance Code (pF)	Capacitance Tolerance	Voltage (VAC)	Packaging
F = Film	X2, Metallized Polypropylene	B = 15 D = 22.5 F = 27.5 R = 37.5	See Dimension Table	First two digits represent significant figures. Third digit specifies number of zeros.	K = ±10% M = ±20%	310	See Ordering Options Table

© KEMET Electronics Corporation • One East Broward Boulevard
Fort Lauderdale, FL 33301 USA • 954-766-2800 • www.kemet.com

Downloaded from Arrow.com.

Ordering Options Table

Lead Spacing Nominal (mm)	Type of Leads and Packaging	Lead Length (mm)	Lead and Packaging Code
15	**Standard Lead and Packaging Options**		
	Pizza Pack	4 +2/−0	Z
	Ammo Pack	H_0 = 18.5 ±0.5	R
	Other Lead and Packaging Options		
	Bulk – Short Leads	4 +2/−0	C
	Bulk – Long Leads	30 +5/−0	ALW0L
	Pizza – Short Leads	3.2 +0.3/-0.2	ZL32K
	Tape & Reel (Standard Reel)	H_0 = 18.5 ±0.5	L
	Tape & Reel (Large Reel)	H_0 = 18.5 ±0.5	P
22.5	**Standard Lead and Packaging Options**		
	Pizza Pack	4 +2/−0	Z
	Ammo Pack [1]	H_0 = 18.5 ±0.5	R
	Other Lead and Packaging Options		
	Bulk – Short Leads [2]	4 +2/−0	C
	Bulk – Long Leads	30 +5/−0	ALW0L
	Pizza – Short Leads	3.2 +0.3/-0.2	ZL32K
	Tape & Reel (Standard Reel)	H_0 = 18.5 ±0.5	L
	Tape & Reel (Large Reel)	H_0 = 18.5 ±0.5	P
27.5 37.5	**Standard Lead and Packaging Options**		
	Tray – Long Leads	30 +5/−0	ALW0L
	Other Lead and Packaging Options		
	Tray – Short Leads	4 +2/−0	Z
	Tray – Short Leads	3.2 +0.3/-0.2	ZL32K

[1] *Only for dimensions ≤ 11 x 20 x 26.5 mm*
[2] *Only for dimensions ≤ 7 x 16 x 26.5 mm*

Downloaded from Arrow.com.

Dimensions – Millimeters

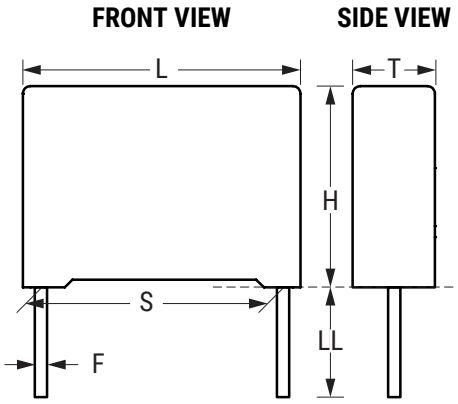

Size Code	S		T		H		L		F	
	Nominal	Tolerance	Nominal	Tolerance	Nominal	Tolerance	Nominal	Tolerance	Nominal	Tolerance
BC	15.0	±0.4	5.0	+0.2/−0.5	11.0	+0.1/−0.5	18.0	+0.3/−0.5	0.6	±0.05
BF	15.0	±0.4	6.0	+0.2/−0.5	12.0	+0.1/−0.5	18.0	+0.3/−0.5	0.6	±0.05
BK	15.0	±0.4	7.5	+0.2/−0.5	13.5	+0.1/−0.5	18.0	+0.5/−0.5	0.6	±0.05
BN	15.0	±0.4	8.5	+0.2/−0.5	14.5	+0.1/−0.5	18.0	+0.5/−0.5	0.6	±0.05
BS	15.0	±0.4	10.0	+0.2/−0.5	16.0	+0.1/−0.5	18.0	+0.5/−0.5	0.8	±0.05
BT	15.0	±0.4	9.0	+0.2/−0.5	12.5	+0.1/−0.5	18.0	+0.5/−0.5	0.6	±0.05
BW	15.0	±0.4	11.0	+0.2/−0.5	19.0	+0.1/−0.5	18.0	+0.5/−0.5	0.8	±0.05
DC	22.5	±0.4	6.0	+0.2/−0.5	15.0	+0.1/−0.5	26.5	+0.3/−0.5	0.8	±0.05
DE	22.5	±0.4	7.0	+0.2/−0.5	16.0	+0.1/−0.5	26.5	+0.3/−0.5	0.8	±0.05
DL	22.5	±0.4	8.5	+0.2/−0.5	17.0	+0.1/−0.5	26.5	+0.3/−0.5	0.8	±0.05
DN	22.5	±0.4	10.0	+0.2/−0.5	18.5	+0.1/−0.5	26.5	+0.3/−0.5	0.8	±0.05
DS	22.5	±0.4	11.0	+0.2/−0.5	20.0	+0.1/−0.5	26.5	+0.3/−0.5	0.8	±0.05
DV	22.5	±0.4	13.0	+0.2/−0.5	22.0	+0.1/−0.5	26.5	+0.3/−0.5	0.8	±0.05
FD	27.5	±0.4	9.0	+0.2/−0.7	17.0	+0.1/−0.7	32.0	+0.3/−0.7	0.8	±0.05
FF	27.5	±0.4	11.0	+0.2/−0.7	20.0	+0.1/−0.7	32.0	+0.3/−0.7	0.8	±0.05
FJ	27.5	±0.4	13.0	+0.2/−0.7	22.0	+0.1/−0.7	32.0	+0.3/−0.7	0.8	±0.05
FL	27.5	±0.4	13.0	+0.2/−0.7	25.0	+0.1/−0.7	32.0	+0.3/−0.7	0.8	±0.05
FP	27.5	±0.4	14.0	+0.2/−0.7	28.0	+0.1/−0.7	32.0	+0.3/−0.7	0.8	±0.05
FU	27.5	±0.4	18.0	+0.2/−0.7	33.0	+0.1/−0.7	32.0	+0.3/−0.7	0.8	±0.05
FW	27.5	±0.4	22.0	+0.2/−0.7	37.0	+0.1/−0.7	32.0	+0.3/−0.7	0.8	±0.05
RE	37.5	±0.4	11.0	+0.3/−0.7	22.0	+0.1/−0.7	41.5	+0.3/−0.7	1.0	±0.05
RG	37.5	±0.4	13.0	+0.3/−0.7	24.0	+0.1/−0.7	41.5	+0.3/−0.7	1.0	±0.05
RJ	37.5	±0.4	16.0	+0.3/−0.7	28.5	+0.1/−0.7	41.5	+0.3/−0.7	1.0	±0.05
RL	37.5	±0.4	19.0	+0.3/−0.7	32.0	+0.1/−0.7	41.5	+0.3/−0.7	1.0	±0.05
RQ	37.5	±0.4	20.0	+0.3/−0.7	40.0	+0.1/−0.7	41.5	+0.3/−0.7	1.0	±0.05
RR	37.5	±0.4	24.0	+0.3/−0.7	44.0	+0.1/−0.7	41.5	+0.3/−0.7	1.0	±0.05
RT	37.5	±0.4	30.0	+0.3/−0.7	45.0	+0.1/−0.7	41.5	+0.3/−0.7	1.0	±0.05

Note: See the Ordering Options Table for lead length (LL/H_0) options.

Downloaded from Arrow.com.

Qualification

Automotive Grade products meet or exceed the requirements outlined by the Automotive Electronics Council. Details regarding test methods and conditions are referenced in document AEC–Q200, Stress Test Qualification for Passive Components. For additional information regarding the Automotive Electronics Council and AEC–Q200, please visit their website at www.aecouncil.com.

Performance Characteristics

Rated Voltage	310 VAC 50/60 Hz			
Capacitance Range	0.1 – 10 µF			
Capacitance Tolerance	±20%, ±10%			
Operating Temperature Range	−40°C to +110°C			
Rated Temperature	+110°C			
Climatic Category	40/110/56			
Storage Conditions	Storage time: ≤ 24 months from the date marked on the label package Average relative humidity per year ≤ 70% RH ≤ 85% for 30 days randomly distributed throughout the year Dew is absent Temperature: -40 to 80°C (see "Maximum Humidity in Storage Conditions" graph below)			
Approvals	ENEC, UL, cUL, CQC			
Dissipation Factor	Maximum Values at +23°C			
		C ≤ 0.1 µF	C > 0.1 µF	
	1 kHz	0.3%	0.2%	
Test Voltage Between Terminals	The 100% screening factory test is carried out at 1,900 VDC. The voltage level is selected to meet the requirements in applicable equipment standards. All electrical characteristics are checked after the test. It's not permitted to repeat this Test as there is a risk to damage the Capacitor. KEMET is not liable in such case for any failures			
Insulation Resistance	Measured at +25°C ±5°C, according to IEC 60384-2			
	Minimum Values Between Terminals			
	Voltage Charge	Voltage Charge time	C ≤ 0.33 µF	C > 0.33 µF
	100 VDC	1 minute	≥ 3 • 10^4 MΩ	≥ 10,000 MΩ • µF
In DC Applications	Recommended voltage ≤ 630 VDC			

Downloaded from Arrow.com.

Performance Characteristics cont.

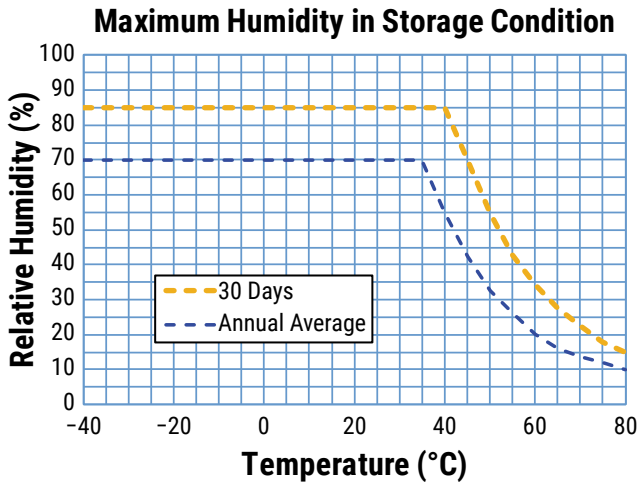

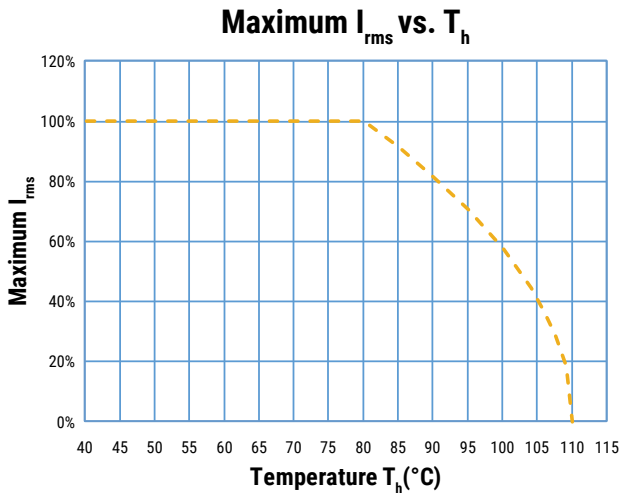

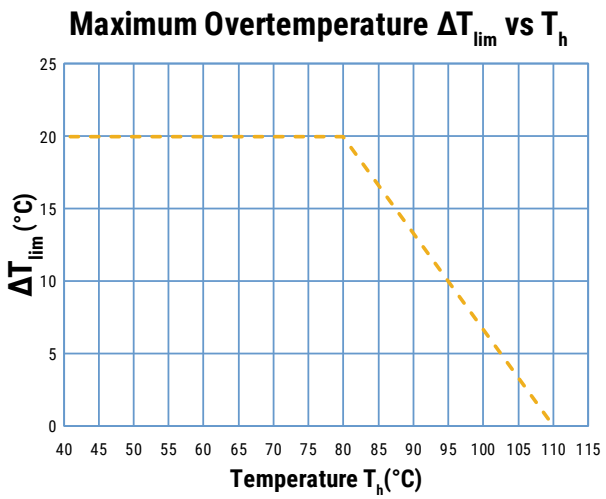

T_h is the maximum ambient temperature surrounding the capacitor or hottest contact point (e.g. tracks), whichever is higher, in the worst operation conditions in °C.

Downloaded from Arrow.com.

Maximum Voltage (V_{rms}) Versus Frequency (Sinusoidal Waveform/Th ≤ 80°C)

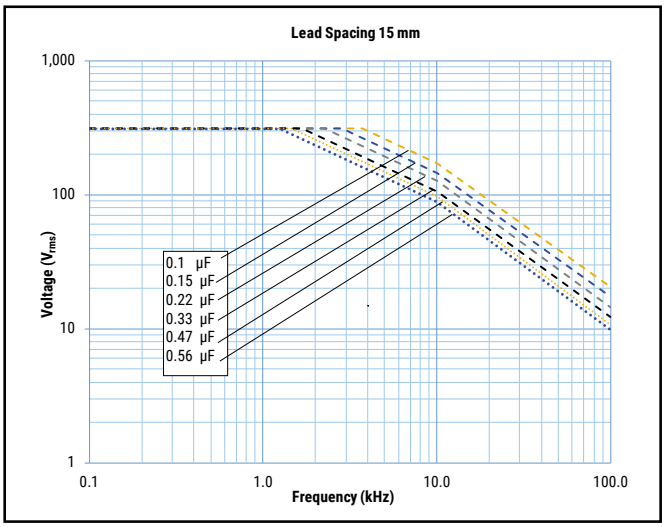

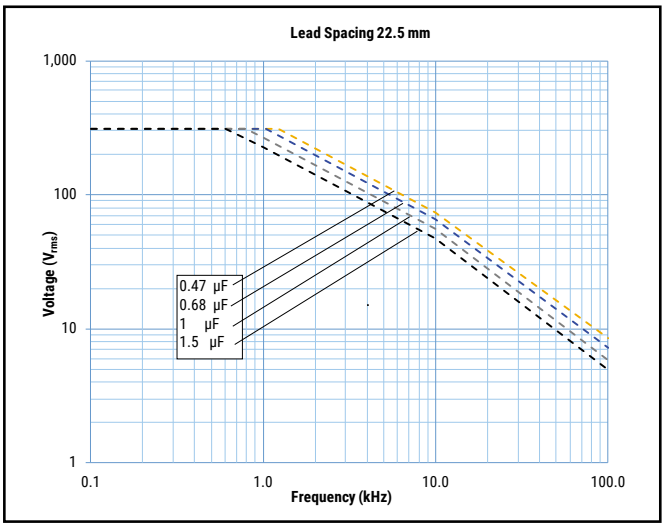

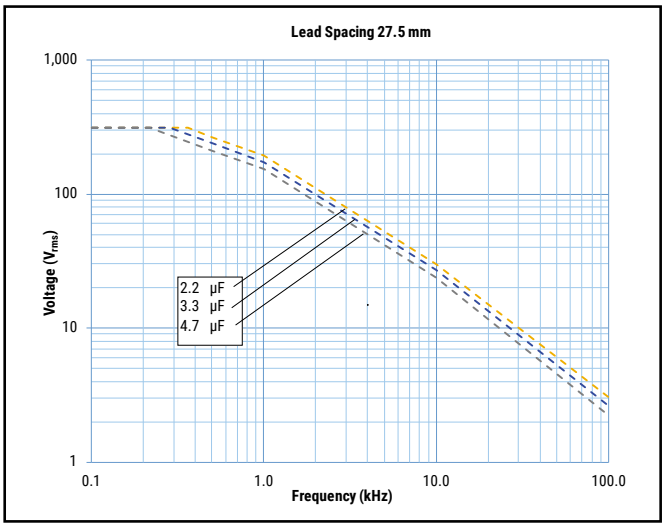

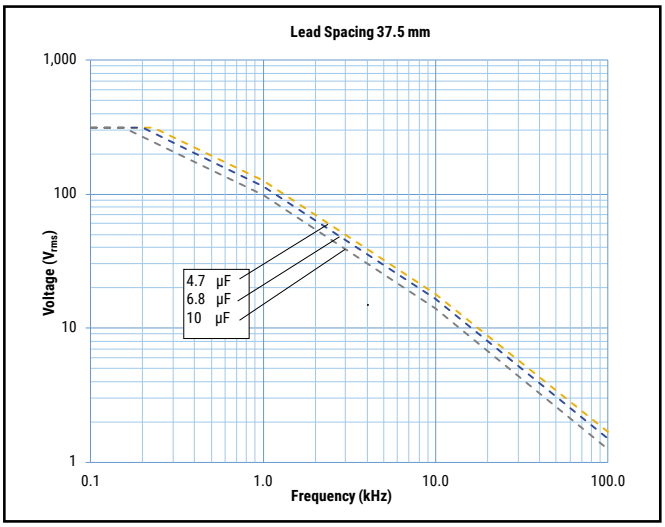

All the curves are evaluated in accordance to the datasheet declarations and considering an environmental condition as Dry Condition.
If your environment is too harsh in terms of temperature and relative humidity, please contact KEMET for any kind of information.

Downloaded from Arrow.com.

Maximum Current (A_{rms}) Versus Frequency (Sinusoidal Waveform/Th ≤ 80°C)

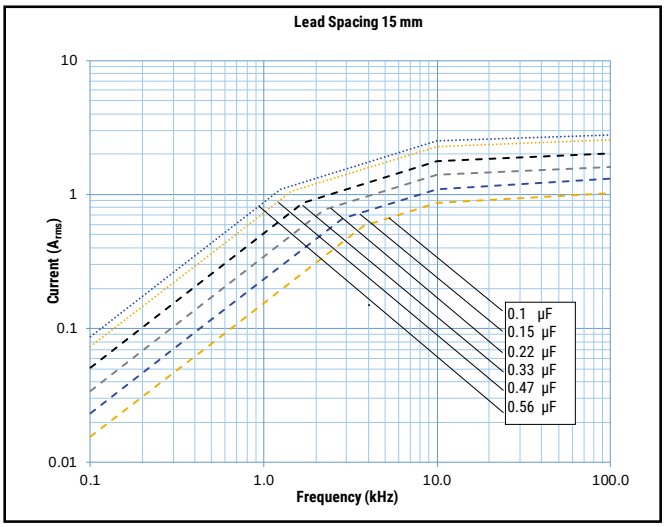

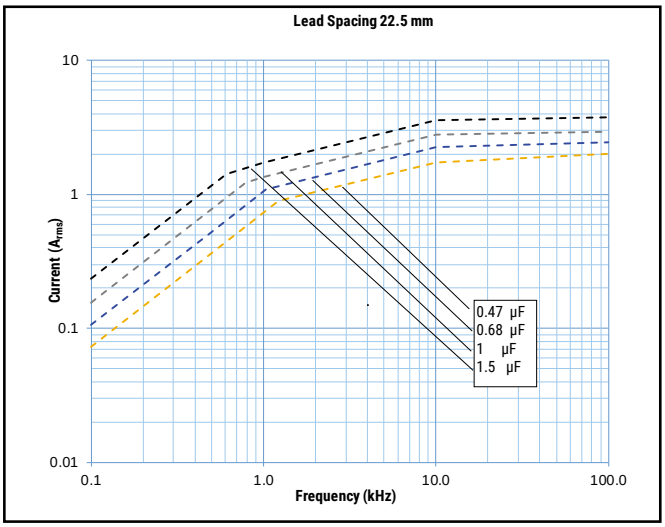

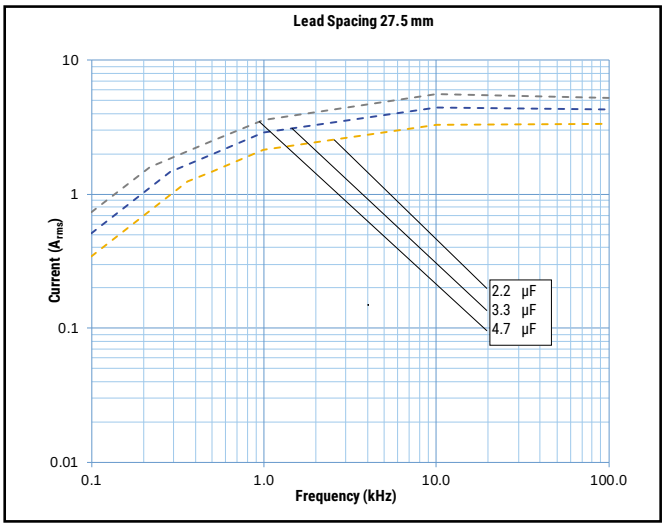

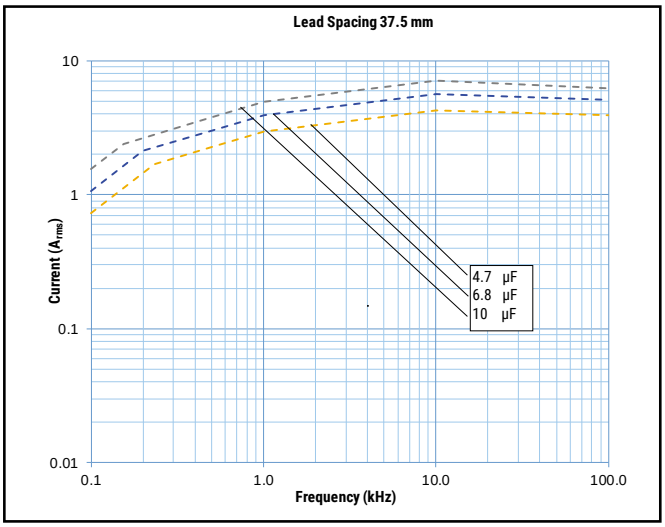

All the curves are evaluated in accordance to the datasheet declarations and considering an environmental condition as Dry Condition.
If your environment is too harsh in terms of temperature and relative humidity, please contact KEMET for any kind of information.

Downloaded from Arrow.com.

Impedance Graph

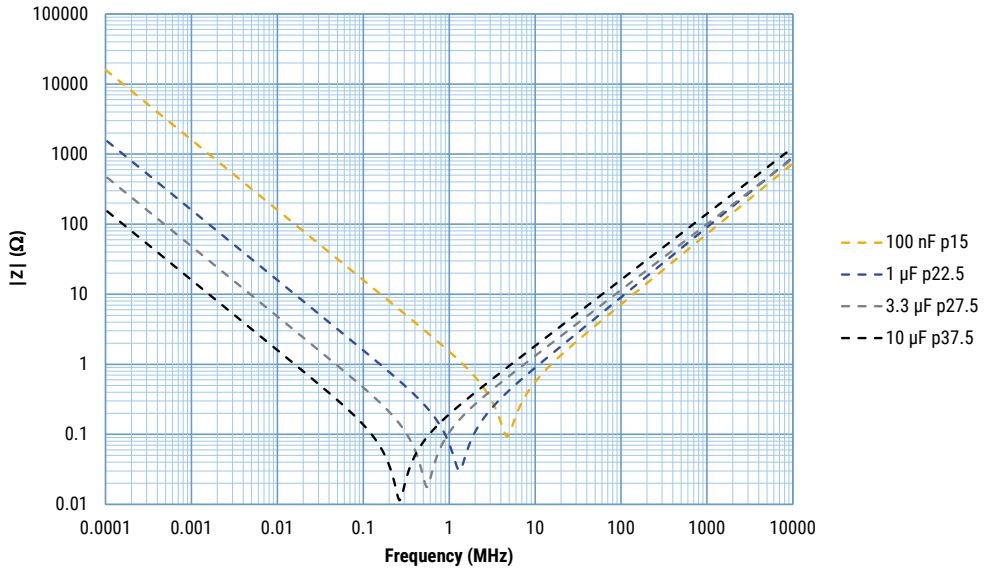

Typical Values

Environmental Test Data

Test	Publication	Procedure
Endurance	IEC 60384–14	1.25 x V_R VAC 50 Hz, once every hour increase to 1,000 VAC for 0.1 second, 1,000 hours at upper rated temperature
Vibration	IEC 60068–2–6 Test Fc	3 directions at 2 hours each 10 – 55 Hz at 0.75 mm or 98 m/s^2
Bump	IEC 60068–2–29 Test Eb	1,000 bumps at 390 m/s^2
Temperature Cycling	JESD22–MethodJA–104	1,000 cycles (–55°C to 85°C) Note: If 100°C or 125°C part the 1,000 cycles will be at that temperature rating. Measurement at 24 ±4 hours after test conclusion. 30 minute maximum dwell time at each temperature extreme. 1 minute maximum transition time.
Active Flammability	IEC 60384–14	V_R +20 surge pulses at 2.5 kV (pulse every 5 seconds)
Passive Flammability	IEC 60384–14	IEC 60384–1, IEC 60695–11–5 Needle–flame test
Biased Humidity	MIL–STD–202 Method 103	1,000 hours 40°C/93%RH. Rated Voltage. Measurement at 24 ±2 hours after test conclusion.
THB Test		85°C, 85% RH and 240 VAC, 500 hours Capacitance change (ΔC/C): ≤ 10% Dissipation factor change (Δtan δ): ≤ 5 * 10^{-3} (at 1 kHz) Insulation resistance Rins or time constant τ = CR Rins: ≥ 50% of initial limit

Downloaded from Arrow.com.

Approvals

Certification Body	Mark	Specification	File Number
IMQ S.p.A.		EN/IEC 60384–14	CA08.00209
UL		UL 60384–14 and CAN/CSA–E60384–14	E97797
CQC		IEC 60384–14	CQC15001128240 CQC15001128444 CQC15001128445 CQC15001128446

Environmental Compliance

All new KEMET EMI capacitors are RoHS compliant.

Table 1 – Ratings & Part Number Reference

Capacitance Value (µF)	Size Code	Dimensions in mm			Lead Spacing (S)	dV/dt (V/µs)	Part Number
		T	H	L			
0.1	BC	5.0	11.0	18.0	15.0	400	F863BC104(1)310(2)
0.15	BF	6.0	12.0	18.0	15.0	400	F863BF154(1)310(2)
0.22	BK	7.5	13.5	18.0	15.0	400	F863BK224(1)310(2)
0.33	BN	8.5	14.5	18.0	15.0	400	F863BN334(1)310(2)
0.47	BW	11.0	19.0	18.0	15.0	400	F863BW474(1)310(2)
0.56	BW	11.0	19.0	18.0	15.0	400	F863BW564(1)310(2)
0.47	DE	7.0	16.0	26.5	22.5	200	F863DE474(1)310(2)
0.68	DN	10.0	18.5	26.5	22.5	200	F863DN684(1)310(2)
1.0	DS	11.0	20.0	26.5	22.5	200	F863DS105(1)310(2)
1.5	DV	13.0	22.0	26.5	22.5	200	F863DV155(1)310(2)
2.2	FL	13.0	25.0	32.0	27.5	150	F863FL225(1)310(2)
3.3	FU	18.0	33.0	32.0	27.5	150	F863FU335(1)310(2)
4.7	FW	22.0	37.0	32.0	27.5	150	F863FW475(1)310(2)
4.7	RL	19.0	32.0	41.5	37.5	100	F863RL475(1)310(2)
6.8	RR	24.0	44.0	41.5	37.5	100	F863RR685(1)310(2)
10.0	RT	30.0	45.0	41.5	37.5	100	F863RT106(1)310(2)
Capacitance Value (µF)	**Size Code**	**T (mm)**	**H (mm)**	**L (mm)**	**Lead Spacing (S)**	**dV/dt (V/µs)**	**Part Number**

(1) M = ±20%, K = ±10%.
(2) Insert lead and packaging code. See Ordering Options Table for available options.

Downloaded from Arrow.com.

Soldering Process

The implementation of the RoHS directive has resulted in the selection of SnAgCu (SAC) alloys or SnCu alloys as primary solder. This has increased the liquidus temperature from that of 183ºC for SnPb eutectic alloy to 217 – 221°C for the new alloys. As a result, the heat stress to the components, even in wave soldering, has increased considerably due to higher pre-heat and wave temperatures. Polypropylene capacitors are especially sensitive to heat (the melting point of polypropylene is 160 – 170°C). Wave soldering can be destructive, especially for mechanically small polypropylene capacitors (with lead spacing of 5 – 15 mm), and great care has to be taken during soldering. The recommended solder profiles from KEMET should be used. Please consult KEMET with any questions. In general, the wave soldering curve from IEC Publication 61760–1 Edition 2 serves as a solid guideline for successful soldering. Please see Figure 1.

Reflow soldering is not recommended for through-hole film capacitors. Exposing capacitors to a soldering profile in excess of the above the recommended limits may result to degradation or permanent damage to the capacitors.

Do not place the polypropylene capacitor through an adhesive curing oven to cure resin for surface mount components. Insert through-hole parts after the curing of surface mount parts. Consult KEMET to discuss the actual temperature profile in the oven, if through-hole components must pass through the adhesive curing process. A maximum two soldering cycles is recommended. Please allow time for the capacitor surface temperature to return to a normal temperature before the second soldering cycle.

Manual Soldering Recommendations

Following is the recommendation for manual soldering with a soldering iron.

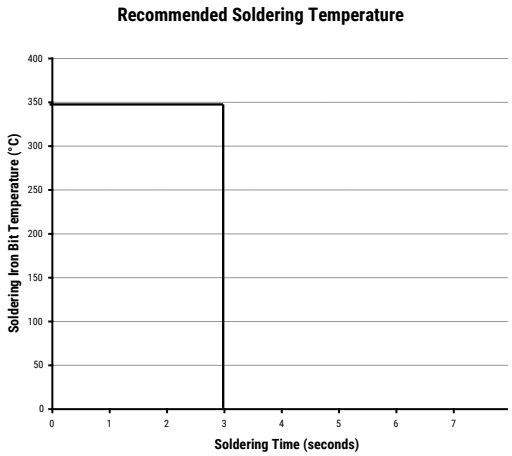

The soldering iron tip temperature should be set at 350°C (+10°C maximum), with the soldering duration not to exceed more than 3 seconds.

Wave Soldering Recommendations

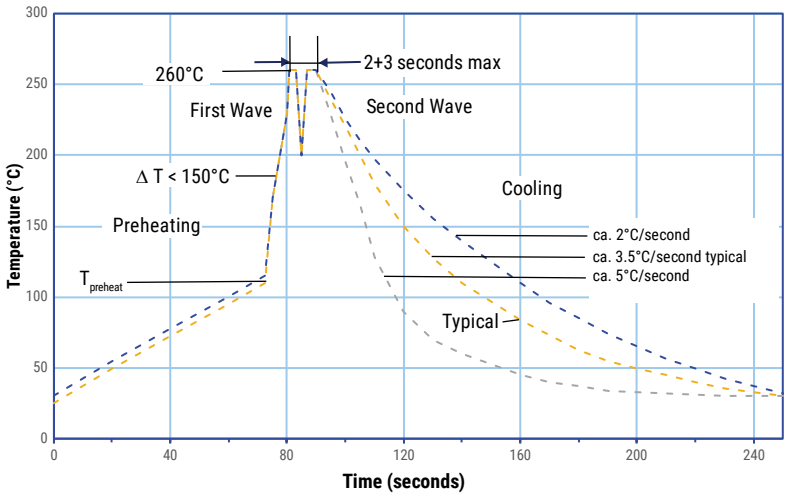

Downloaded from Arrow.com.

Soldering Process cont.

Wave Soldering Recommendations cont.

1. The table indicates the maximum set-up temperature of the soldering process
Figure 1

Dielectric Film Material	Maximum Preheat Temperature		Maximum Peak Soldering Temperature	
	Capacitor Pitch ≤ 15 mm	Capacitor Pitch > 15 mm	Capacitor Pitch ≤ 15 mm	Capacitor Pitch > 15 mm
Polyester	130°C	130°C	270°C	270°C
Polypropylene	110°C	130°C	260°C	270°C
Paper	130°C	140°C	270°C	270°C
Polyphenylene Sulphide	150°C	160°C	270°C	270°C

2. The maximum temperature measured inside the capacitor:
   Set the temperature so that inside the element the maximum temperature is below the limit:

Dielectric Film Material	Maximum Temperature Measured Inside the Element
Polyester	160°C
Polypropylene	110°C
Paper	160°C
Polyphenylene Sulphide	160°C

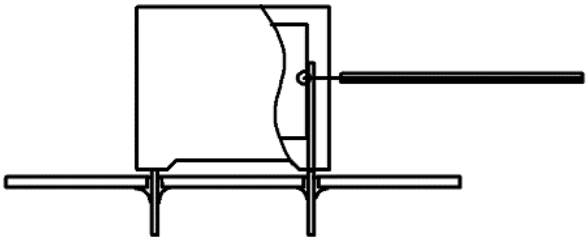

Temperature monitored inside the capacitor.

Selective Soldering Recommendations

Selective dip soldering is a variation of reflow soldering. In this method, the printed circuit board with through-hole components to be soldered is preheated and transported over the solder bath as in normal flow soldering without touching the solder. When the board is over the bath, it is stopped and pre-designed solder pots are lifted from the bath with molten solder only at the places of the selected components, and pressed against the lower surface of the board to solder the components.

The temperature profile for selective soldering is similar to the double wave flow soldering outlined in this document, **however, instead of two baths, there is only one bath with a time from 3 to 10 seconds.** In selective soldering, the risk of overheating is greater than in double wave flow soldering, and great care must be taken so that the parts are not overheated.

Downloaded from Arrow.com.

Mounting

Resistance to Vibration and Mechanical Shock

AEC-Q200 Rev. E Mechanical Stress Tests:

Mechanical Shock	**MIL-SDT-202 Method 213**	Figure 1 of Method 213 • THT: Condition C • SMD: Condition C • Tested per the Supplier's recommended mounting method
Vibration	**MIL-SDT-202 Method 204**	• 5 g for 20 minutes, 12 cycles each of 3 orientations • Tested per the Supplier's recommended mounting method • Verification of transfer load: during setup, verify that with the selected PCB design (size, thickness and secure points), or an alternative mount, that the transferred load onto the component corresponds to the requested load. This verification can be achieved using a laser vibrometer or other adequate measuring device • Test from 10 Hz – 2,000 Hz.

The capacitors are designed for PCB mounting. The stand-off pipes must be in good contact with the printed circuit board. The capacitors with pitch ≤ 22.5 mm can be mechanically fixed by the leads, for pitch > 22.5 mm, the capacitor body has to be properly fixed (e.g. clamped or glued).

Construction

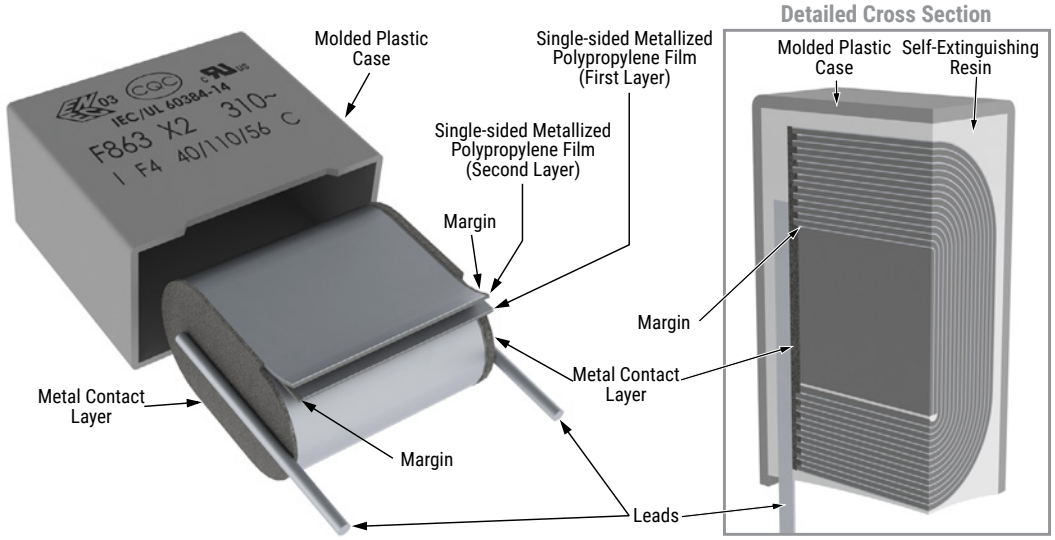

Winding Scheme

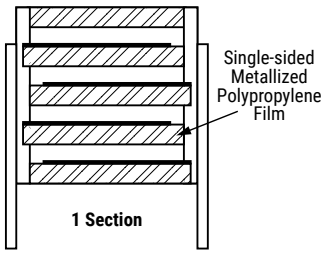

Downloaded from Arrow.com.

Marking

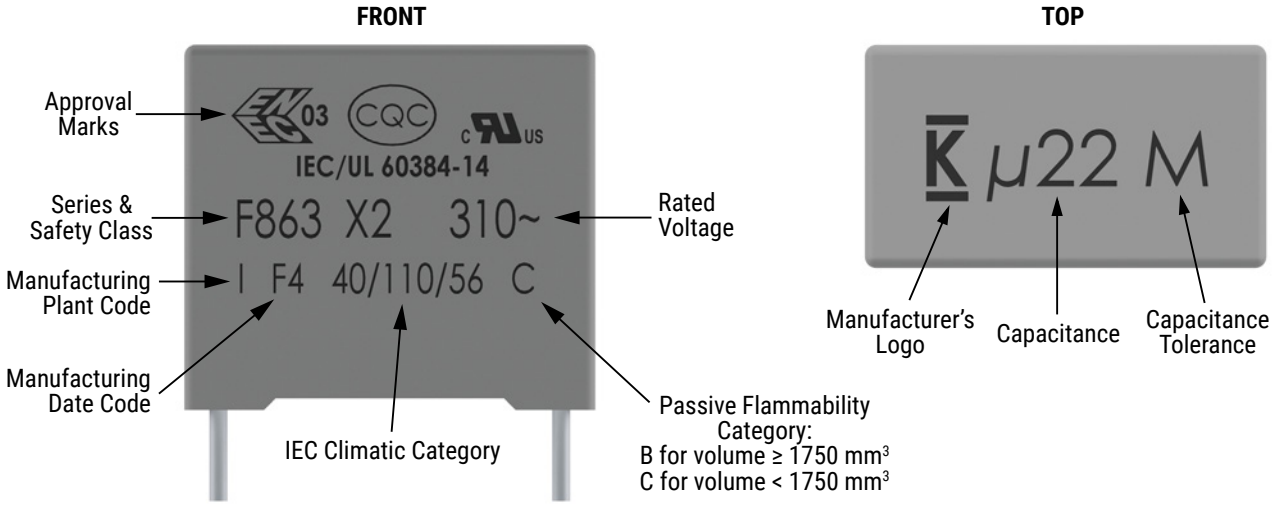

OR

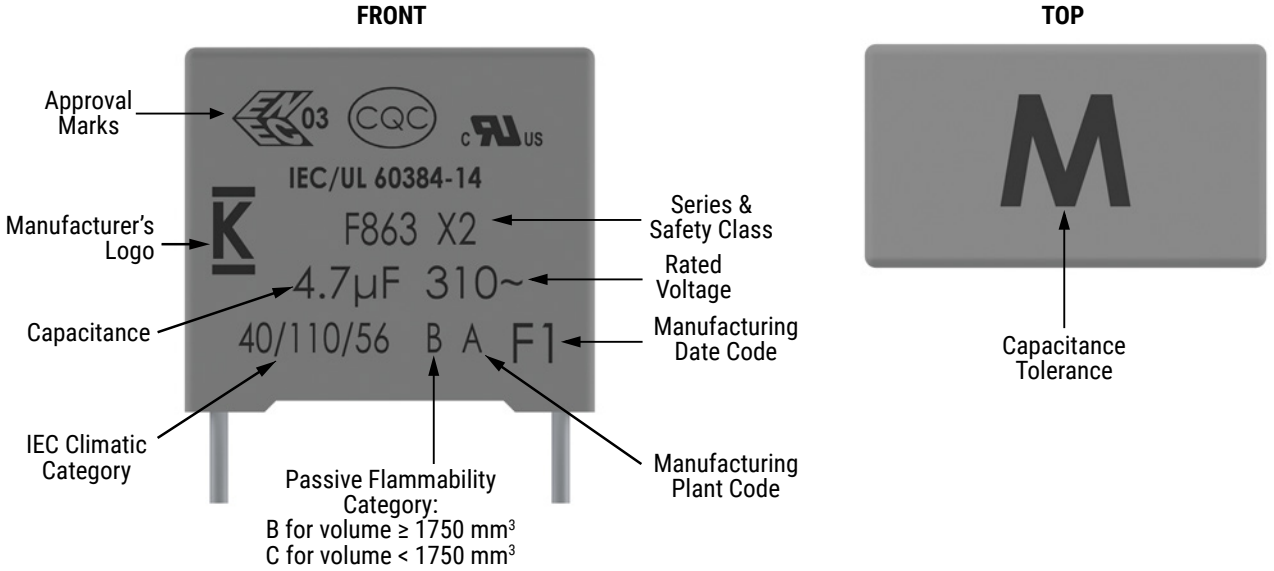

Slight change in the layout can be possible but this does not affect the content of the information of the current marking.
This change will be achieved without impact to product form, fit or function, as the products are equivalent with respect to physical, mechanical, quality and reliability characteristics.

Downloaded from Arrow.com.

Manufacturing Date Code (IEC 60062)									
Year	Code	Year	Code	Year	Code	Month	Code	Month	Code
2020	M	2027	V	2034	E	January	1	July	7
2021	N	2028	W	2035	F	February	2	August	8
2022	P	2029	X	2036	H	March	3	September	9
2023	R	2030	A	2037	J	April	4	October	O
2024	S	2031	B	2038	K	May	5	November	N
2025	T	2032	C	2039	L	June	6	December	D
2026	U	2033	D	2040	M				

Packaging Quantities

Size Code	Lead Spacing	Thickness (mm)	Height (mm)	Length (mm)	Bulk Short Leads	Bulk Long Leads	Tray – Pizza Short Leads	Tray – Pizza Long Leads	Standard Reel (355 mm)	Large Reel (500 mm)	Ammo	Pizza
BC	15	5	11	18	2,000	1,000			600	1,250	800	1,122
BF		6	12	18	1,750	900			500	1,000	680	935
BK		7.5	13.5	18	1,000	700			350	800	500	748
BN		8.5	14.5	18	1,000	500			300	700	440	663
BT		9	12.5	18	1,000	520			270	650	410	612
BS		10	16	18	750	500				600	380	561
BW		11	19	18	450	350				500	340	510
DC	22.5	6	15	26.5	805	500			300	700	464	660
DE		7	16	26.5	700	500			250	550	380	564
DL		8.5	17	26.5		300			250	450	280	468
DN		10	18.5	26.5		300			160	350	235	396
DS		11	20	26.5		250			190	350	217	360
DV		13	22	26.5		200			130	300		300
FD	27.5	9.0	17.0	32.0			816	408				
FF		11.0	20.0	32.0			560	336				
FJ		13.0	22.0	32.0			480	288				
FL		13.0	25.0	32.0			480	288				
FP		14.0	28.0	32.0			352	176				
FU		18.0	33.0	32.0			256	128				
FW		22.0	37.0	32.0			168	112				
RE	37.5	11.0	22.0	41.5			420	252				
RG		13.0	24.0	41.5			360	216				
RJ		16.0	28.5	41.5			216	108				
RL		19.0	32.0	41.5			192	96				
RQ		20.0	40.0	41.5			126	84				
RR		24.0	44.0	41.5			108	72				
RT		30.0	45.0	41.5			90	60				

Downloaded from Arrow.com.

Lead Taping & Packaging (IEC 60286–2)

Lead Spacing 5 mm

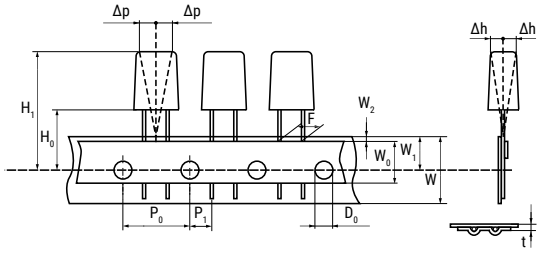

Lead Spacing 7.5 mm

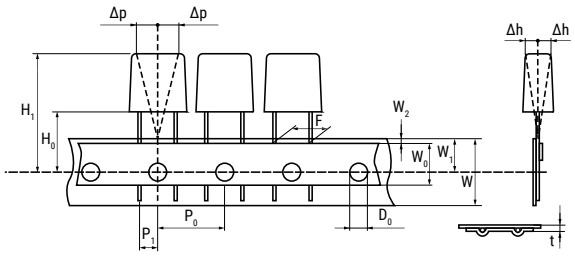

Lead Spacing 10 – 15 mm

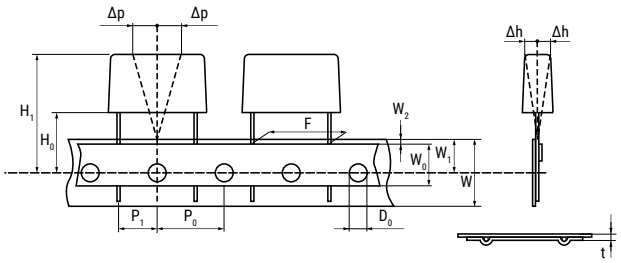

Lead Spacing 22.5 – 27.5 mm

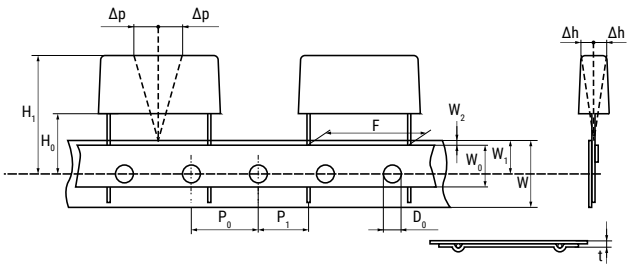

Taping Specification

Dimensions in mm									Standard IEC 60286–2
Lead Spacing	+0.6/−0.1	F	5.0	7.5	10.0	15.0	22.5	27.5	F
Carrier Tape Width	+1/−0.5	W	18.0	18.0	18.0	18.0	18.0	18.0	$18^{+1/-0.5}$
Hold-Down Tape Width	Minimum	W_0	6.0	6.0	9.0	10.0	10.0	10.0	
Position of Sprocket Hole	±0.5	W_1	9.0	9.0	9.0	9.0	9.0	9.0	$9^{+0.75/-0.5}$
Distance Between Tapes	Maximum	W_2	3.0	3.0	3.0	3.0	3.0	3.0	3.0
Sprocket Hole Diameter	±0.2	D_0	4.0	4.0	4.0	4.0	4.0	4.0	4.0
Feed Hole Lead Spacing	±0.2(1)	P_0(3)	12.7	12.7	12.7	12.7	12.7	12.7	12.7
Distance Lead – Feed Hole	±0.7	P_1	3.85	3.75	7.7	5.2	7.8	5.3	P^1
Deviation Tape – Plane	Maximum	Δp	1.3	1.3	1.3	1.3	1.3	1.3	1.3
Lateral Deviation	±2	Δh	2.0	2.0	2.0	2.0	2.0	2.0	2.0
Total Thickness	±0.2	t	0.7	0.7	0.7	0.7	0.9^{MAX}	0.9^{MAX}	0.9^{MAX}
Sprocket Hole/Cap Body	±0.5	H_0(2)	$18.5^{\pm0.5}$	$18.5^{\pm0.5}$	$18.5^{\pm0.5}$	$18.5^{\pm0.5}$	$18.5^{\pm0.5}$	$18.5^{\pm0.5}$	$18^{+2/-0}$

(1) Maximum cumulative feed hole error, 1 mm per 20 parts.
(2) 16.5 mm available on request.
(3) 15 mm available on request (F ≥ 10 mm).

Downloaded from Arrow.com.

Lead Taping & Packaging (IEC 60286–2) cont.

Ammo Specifications

Series	Dimensions (mm)		
	H	W	T
F5A, F5B, F5D	360	340	59
F6xx, F8xx			
PHExxx, PMExxx, PMRxxx	330	330	50

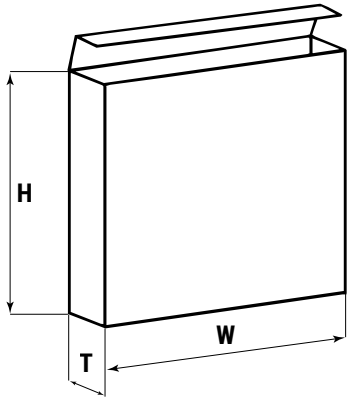

Reel Specifications

Series	Dimensions (mm)		
	D	H	W
F5A, F5B, F5D	355	30	55 (Max)
F6xx, F8xx	500	25	
PHExxx, PMExxx, PMRxxx	360 500	30	46 (Max)

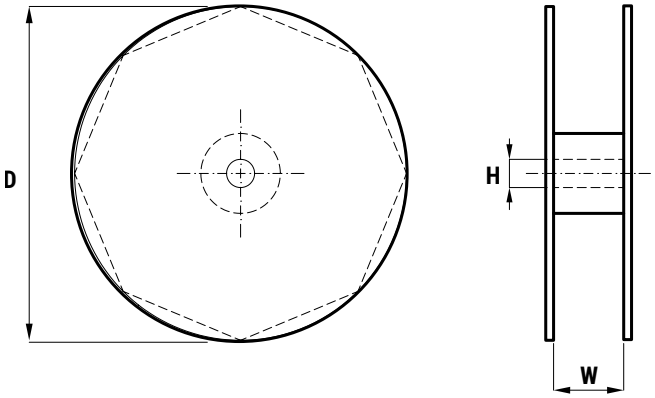

Downloaded from Arrow.com.

KEMET Electronics Corporation Sales Offices

For a complete list of our global sales offices, please visit www.kemet.com/sales.

Disclaimer

YAGEO Corporation and its affiliates do not recommend the use of commercial or automotive grade products for high reliability applications or manned space flight.

All product specifications, statements, information and data (collectively, the "Information") in this datasheet are subject to change. The customer is responsible for checking and verifying the extent to which the Information contained in this publication is applicable to an order at the time the order is placed. All Information given herein is believed to be accurate and reliable, but it is presented without guarantee, warranty, or responsibility of any kind, expressed or implied.

Statements of suitability for certain applications are based on KEMET Electronics Corporation's ("KEMET") knowledge of typical operating conditions for such applications, but are not intended to constitute – and KEMET specifically disclaims – any warranty concerning suitability for a specific customer application or use. The Information is intended for use only by customers who have the requisite experience and capability to determine the correct products for their application. Any technical advice inferred from this Information or otherwise provided by KEMET with reference to the use of KEMET's products is given gratis, and KEMET assumes no obligation or liability for the advice given or results obtained.

Although KEMET designs and manufactures its products to the most stringent quality and safety standards, given the current state of the art, isolated component failures may still occur. Accordingly, customer applications which require a high degree of reliability or safety should employ suitable designs or other safeguards (such as installation of protective circuitry or redundancies) in order to ensure that the failure of an electrical component does not result in a risk of personal injury or property damage.

Although all product–related warnings, cautions and notes must be observed, the customer should not assume that all safety measures are indicated or that other measures may not be required.

Additional information about production site flexibility can be found <here>

KEMET is a registered trademark of KEMET Electronics Corporation.

Downloaded from Arrow.com.