## Overview

The PME295 is constructed of multilayer metallized paper encapsulated and impregnated in self-extinguishing material, meeting the requirements of UL 94 V–0.

## Applications

Safety capacitors for bridging of double or reinforced insulation applications, requiring voltage testing up to 4,000 VAC at 60 seconds. PME295 capacitors can be left in place during this test.

## Benefits

- Approvals: ENEC, UL, cUL, CQC
- Rated voltage: 440 VAC/480 VAC 50/60 Hz
- Capacitance range: 470 – 4,700 pF
- Lead spacing: 15.0 mm
- Capacitance tolerance: ±20%
- Climatic category: 40/115/56/B, IEC 60068–1
- Tape & Reel packaging in accordance with IEC 60286–2
- RoHS Compliant and lead-free terminations
- Operating temperature range of −40˚C to +115˚C
- 100% screening factory test at 4,000 VAC, 50 Hz, 2 seconds

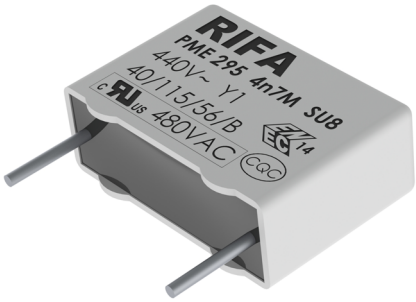


## Legacy Part Number System

| PME295 | R | B | 3470 | M | R30 |
|---|---|---|---|---|---|
| Series | Rated Voltage (VAC) | Lead Spacing (mm) | Capacitance Code (pF) | Capacitance Tolerance | Packaging |
| Y1, Metallized Paper | R = 440 | B = 15.0 | The last three digits represent significant figures. The first digit specifies the total number of digits. | J = ±5%<br>K = ±10%<br>M = ±20% | See Ordering Options Table |

## New KEMET Part Number System

| P | 295 | B | E | 471 | M | 440 | A |
|---|---|---|---|---|---|---|---|
| Capacitor Class | Series | Lead Spacing (mm) | Size Code | Capacitance Code (pF) | Capacitance Tolerance | Rated Voltage (VAC) | Packaging |
| P = Paper | Y1, Metallized Paper | B = 15.0 | See Dimension Table | First two digits represent significant figures. Third digit specifies number of zeros. | J = ±5%<br>K = ±10%<br>M = ±20% | 440 = 440 | See Ordering Options Table |



Downloaded from Arrow.com.

## Benefits cont.

- Highest possible safety regarding active and passive flammability
- Excellent self-healing properties ensure long life even when subjected to frequent over voltages
- Good resistance to ionization due to impregnated dielectric
- High dV/dt capability
- Impregnated paper provides excellent stability and reliability properties, particularly in applications with continuous operation

## Ordering Options Table

| Lead Spacing Nominal (mm) | Type of Leads and Packaging | Lead Length (mm) | KEMET Lead and Packaging Code | Legacy Lead and Packaging Code |
|---|---|---|---|---|
| 15 | **Standard Lead and Packaging Options** | | | |
| | Bulk (Bag) – Short leads | 6 +0/−1 | C | R06 |
| | Bulk (Bag) – Maximum length leads | 30 +5/−0 | A | R30 |
| | Tape & Reel (Standard reel Φ = 360 mm) | $H_0$ = 18.5 ±0.5 | L | R19T0 |
| Native 15 formed to 7.5 | Tape & Reel (Standard reel Φ = 360 mm) | $H_0$ = 18.5 ±0.5 | XLTF1 | R25X2 |

## Dimensions – Millimeters

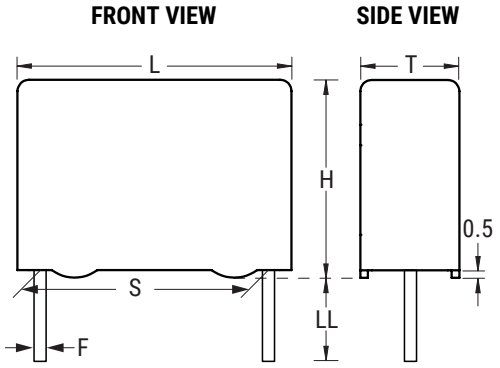


| S | | T | | H | | L | | F | |
|---|---|---|---|---|---|---|---|---|---|
| Nominal | Tolerance | Nominal | Tolerance | Nominal | Tolerance | Nominal | Tolerance | Nominal | Tolerance |
| 15 | ±0.4 | 5.5 | Maximum | 12.5 | Maximum | 18 | Maximum | 0.8 | ±0.05 |
| 15 | ±0.4 | 6.5 | Maximum | 12.5 | Maximum | 18 | Maximum | 0.8 | ±0.05 |
| 15 | ±0.4 | 7.5 | Maximum | 14.5 | Maximum | 18 | Maximum | 0.8 | ±0.05 |
| 15 | ±0.4 | 8.5 | Maximum | 16 | Maximum | 18 | Maximum | 0.8 | ±0.05 |
| **Note: See Ordering Options Table for lead length (LL) options.** | | | | | | | | | |



Downloaded from Arrow.com.

## Performance Characteristics

| | | |
|---|---|---|
| Rated Voltage | 440 VAC 50/60 Hz (ENEC) | |
| | 480 VAC 50/60 Hz (UL, cUL) | |
| Capacitance Range | 0.00047 – 0.0047 µF | |
| Capacitance Tolerance | ±20% | |
| Operating Temperature Range | −40°C to +115°C | |
| Rated Temperature | +115°C | |
| Climatic Category | 40/115/56/B | |
| Approvals | ENEC, UL, cUL, CQC | |
| Dissipation Factor | Maximum Values at +23°C | |
| | 1 kHz | 1.3% |
| Test Voltage Between Terminals | The 100% screening factory test is carried out at 4,000 VAC, 50 Hz, 2 seconds. The voltage level is selected to meet the requirements in applicable equipment standards. All electrical characteristics are checked after the test. | |
| Insulation Resistance | Measured at 500 VDC after 60 seconds, +23°C | |
| | Between Terminals: | |
| | 12,000 MΩ | |
| In DC Applications | Recommended voltage ≤ 1,500 VDC | |
| Resonance Frequency | Tabulated self-resonance frequencies $f_0$ refer to 5 mm lead length | |

## Suppression vs. Frequency, Typical Values

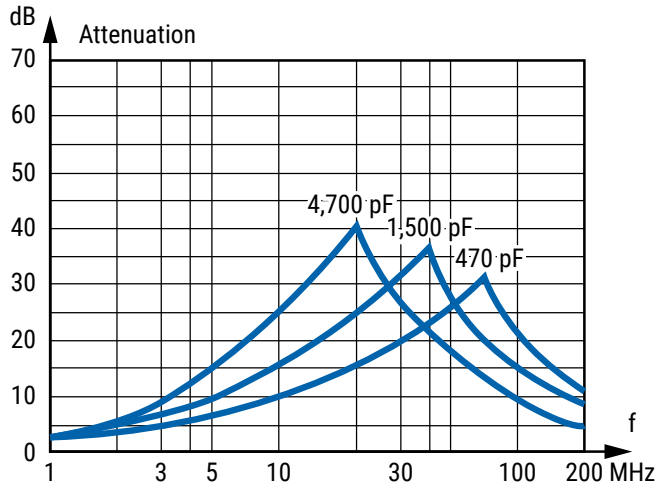




Downloaded from Arrow.com.

## Environmental Test Data

| Test | IEC Publication | Procedure |
|---|---|---|
| Endurance | IEC 60384-14 | 1.7 x $V_R$ Vac 50 Hz, once every hour increase to 1,000 VAC for 0.1 second, 1,000 hours at upper rated temperature. |
| Vibration | IEC 60068-2-6 Test Fc | 3 directions at 2 hours each<br>10 – 500 Hz at 0.75 mm or 98 $m/s^2$ |
| Bump | IEC 60068-2-29 Test Eb | 4,000 bumps at 390 $m/s^2$ |
| Change of Temperature | IEC 60068-2-14 Test Na | Upper and lower rated temperature 5 cycles |
| Passive Flammability | IEC 60384-14 | IEC 60384-1, IEC 60695-11-5 Needle flame test |
| Humidity | IEC 60068-2-3 Test Ca | +40°C and 93% RH, 56 days |
| Biased Humidity | IEC 60384-14:2023 Edition 5 | +40°C and 93% RH, Rated Voltage, 21 days |

## Approvals

| Certification Body | Mark | Specification | File Number |
|---|---|---|---|
| IMQ S.p.A. | | EN/IEC 60384–14 (440 VAC) | CA08.00252 |
| UL | | UL 60384-14<br>CAN/CSA E60384-14 | E73869 |
| CQC | | IEC 60384–14 | CQC16001145221 |



Downloaded from Arrow.com.

## Environmental Compliance

All KEMET EMI capacitors are RoHS Compliant.

## Table 1 – Ratings & Part Number Reference

| Capacitance Value (µF) | Maximum Dimensions in mm | | | Lead Spacing (S) | $f_o$ (MHz) | dV/dt (V/µs) | KEMET Part Number | Legacy Part Number |
|---|---|---|---|---|---|---|---|---|
| | T | H | L | | | | | |
| 0.00047 | 5.5 | 12.5 | 18.0 | 15.0 | 64 | 2,000 | P295BE471(3)440(1) | PME295RB3470(3)(1) |
| 0.00056 | 5.5 | 12.5 | 18.0 | 15.0 | 59 | 2,000 | P295BE561(3)440(1) | PME295RB3560(3)(1) |
| 0.00068 | 5.5 | 12.5 | 18.0 | 15.0 | 54 | 2,000 | P295BE681(3)440(1) | PME295RB3680(3)(1) |
| 0.00082 | 5.5 | 12.5 | 18.0 | 15.0 | 49 | 2,000 | P295BE821(3)440(1) | PME295RB3820(3)(1) |
| 0.001 | 5.5 | 12.5 | 18.0 | 15.0 | 46 | 2,000 | P295BE102(2)440(1) | PME295RB4100(2)(1) |
| 0.0012 | 6.5 | 12.5 | 18.0 | 15.0 | 43 | 2,000 | P295BJ122(2)440(1) | PME295RB4120(2)(1) |
| 0.0015 | 6.5 | 12.5 | 18.0 | 15.0 | 40 | 2,000 | P295BJ152(2)440(1) | PME295RB4150(2)(1) |
| 0.0018 | 6.5 | 12.5 | 18.0 | 15.0 | 37 | 2,000 | P295BJ182(2)440(1) | PME295RB4180(2)(1) |
| 0.0022 | 6.5 | 12.5 | 18.0 | 15.0 | 33 | 2,000 | P295BJ222(2)440(1) | PME295RB4220(2)(1) |
| 0.0025 | 7.5 | 14.5 | 18.0 | 15.0 | 31 | 2,000 | P295BL252(2)440(1) | PME295RB4250(2)(1) |
| 0.0027 | 7.5 | 14.5 | 18.0 | 15.0 | 30 | 2,000 | P295BL272(2)440(1) | PME295RB4270(2)(1) |
| 0.0033 | 7.5 | 14.5 | 18.0 | 15.0 | 27 | 2,000 | P295BL332(2)440(1) | PME295RB4330(2)(1) |
| 0.0039 | 8.5 | 16.0 | 18.0 | 15.0 | 24 | 2,000 | P295BQ392(2)440(1) | PME295RB4390(2)(1) |
| 0.0047 | 8.5 | 16.0 | 18.0 | 15.0 | 22 | 2,000 | P295BQ472(2)440(1) | PME295RB4470(2)(1) |
| **Capacitance Value (µF)** | **T (mm)** | **H (mm)** | **L (mm)** | **Lead Spacing (S)** | **$f_o$ (MHz)** | **dV/dt (V/µs)** | **KEMET Part Number** | **Legacy Part Number** |

*(1) Insert ordering code for lead type and packaging. See Ordering Options Table for available options.*
*(2) Insert tolerance letter (J = ±5%, K = ±10%, M = ±20%)*
*(3) Insert tolerance letter (K = ±10%, M = ±20%)*



Downloaded from Arrow.com.

## Soldering Process

The implementation of the RoHS directive has resulted in the selection of SnAuCu (SAC) alloys or SnCu alloys as primary solder. This has increased the liquidus temperature from 183°C for SnPb eutectic alloys to 217 – 221°C for the new alloys. As a result, the heat stress to the components, even in wave soldering, has increased considerably due to higher preheat and wave temperatures. Polypropylene capacitors are especially sensitive to heat (the melting point of polypropylene is 160 – 170°C). Wave soldering can be destructive, especially for mechanically small polypropylene capacitors (with lead spacing of 5 to 15 mm), and great care must be taken during soldering. The recommended solder profiles from KEMET should be used. Consult KEMET with any questions. In general, the wave soldering curve from IEC Publication 61760-1, Edition 2 serves as a solid guideline for successful soldering. See Figure 1.

Reflow soldering is not recommended for through-hole film capacitors. Exposing capacitors to a soldering profile in excess of the above the recommended limits may result in degradation of or permanent damage to the capacitors.

Do not place the polypropylene capacitor through an adhesive curing oven to cure resin for surface mount components. Insert through-hole parts after the curing of surface mount parts. Consult KEMET to discuss the actual temperature profile in the oven, if through-hole components must pass through the adhesive curing process. A maximum of two soldering cycles is recommended. Allow time for the capacitor surface temperature to return to normal before the second soldering cycle.

### Manual Soldering Recommendations

Following is the recommendation for manual soldering with a soldering iron.

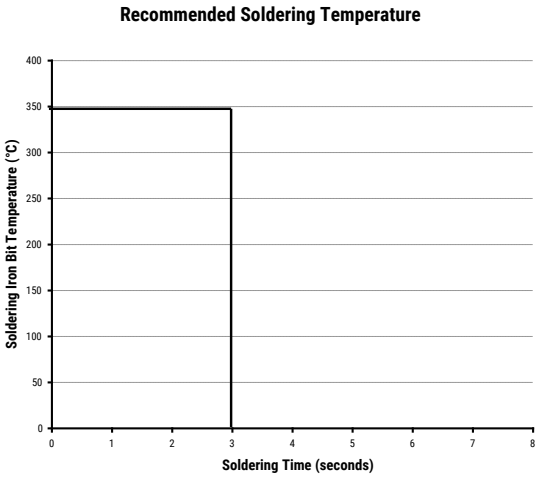


The soldering iron tip temperature should be set at 350°C (+10°C maximum) with the soldering duration not to exceed more than 3 seconds.

### Wave Soldering Recommendations

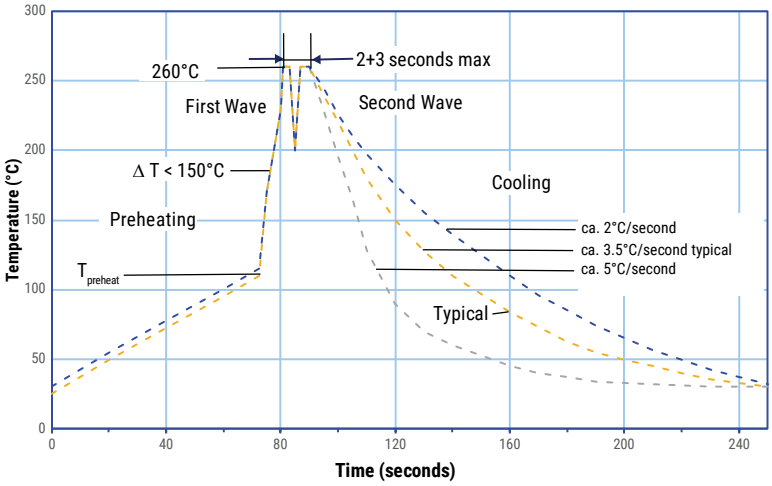




Downloaded from Arrow.com.

## Soldering Process cont.

**Wave Soldering Recommendations cont.**

1. The table indicates the maximum set-up temperature of the soldering process
   Figure 1

| Dielectric film material | Maximum Preheat Temperature | | Maximum Peak Soldering Temperature | |
|---|---|---|---|---|
| | Capacitor Pitch ≤ 15 mm | Capacitor Pitch > 15 mm | Capacitor Pitch ≤ 15 mm | Capacitor Pitch > 15 mm |
| Polyester | 130°C | 130°C | 270°C | 270°C |
| Polypropylene | 110°C | 130°C | 260°C | 270°C |
| Paper | 130°C | 140°C | 270°C | 270°C |
| Polyphenylene Sulphide | 150°C | 160°C | 270°C | 270°C |

2. The maximum temperature measured inside the capacitor: set the temperature so that inside the element the maximum temperature is below the limit.

| Dielectric Film Material | Maximum Temperature Measured Inside the Element |
|---|---|
| Polyester | 160°C |
| Polypropylene | 110°C |
| Paper | 160°C |
| Polyphenylene sulphide | 160°C |

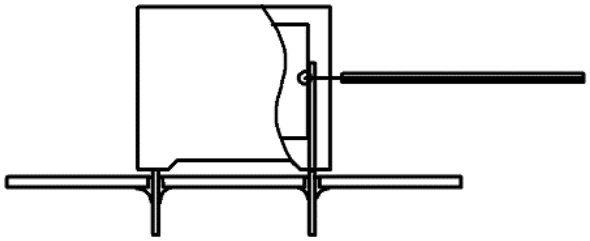

*Temperature monitored inside the capacitor.*

**Selective Soldering Recommendations**

Selective dip soldering is a variation of reflow soldering. In this method, the printed circuit board with through-hole components to be soldered is preheated and transported over the solder bath, as in normal-flow soldering, without touching the solder. When the board is over the bath, it is stopped. Pre-designed solder pots are lifted from the bath with molten solder only at the places of the selected components, and then pressed against the lower surface of the board to solder the components.

The temperature profile for selective soldering is similar to the temperature profile for double-wave flow soldering outlined in this document. However, instead of two baths, there is only one with a time from 3 to 10 seconds. In selective soldering, the risk of overheating is greater than in double-wave flow soldering, and great care must be taken so that the parts do not overheat.



Downloaded from Arrow.com.

## Construction

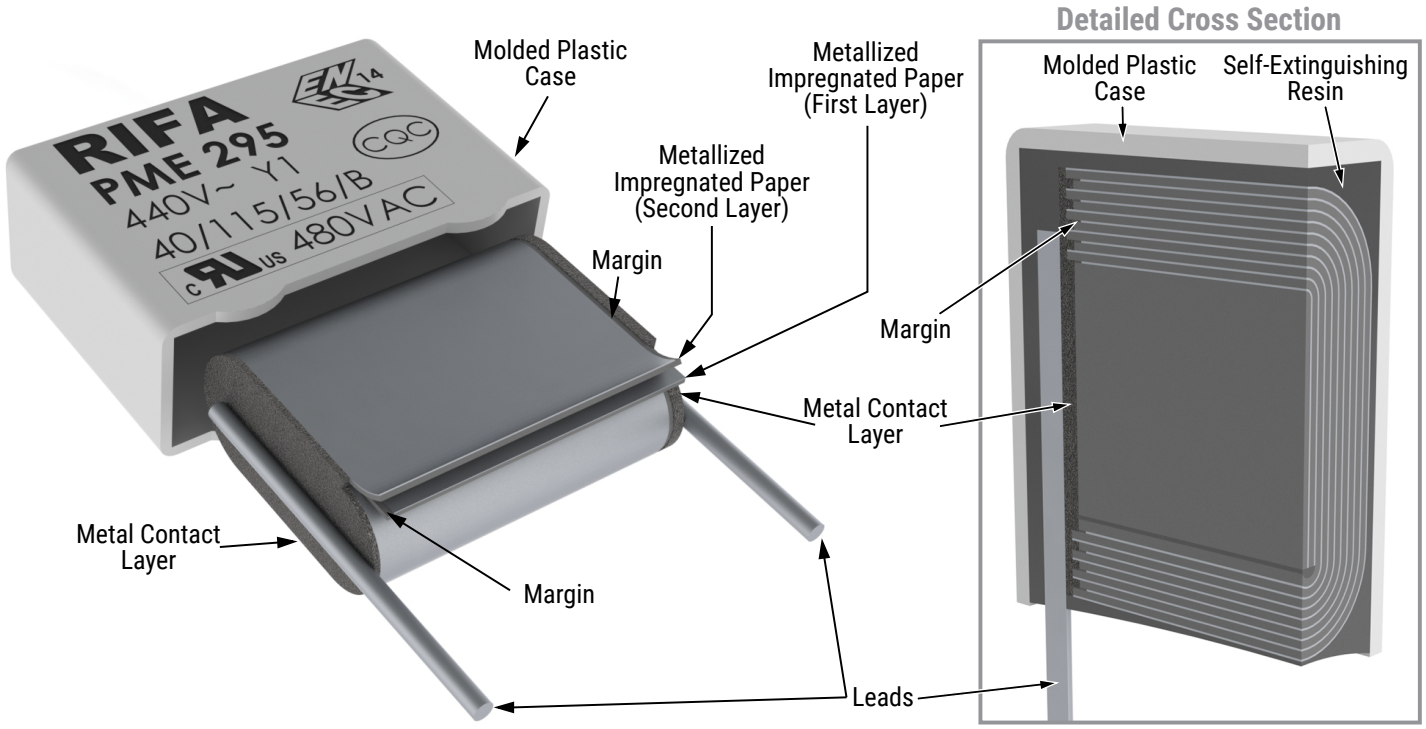


### Winding Scheme

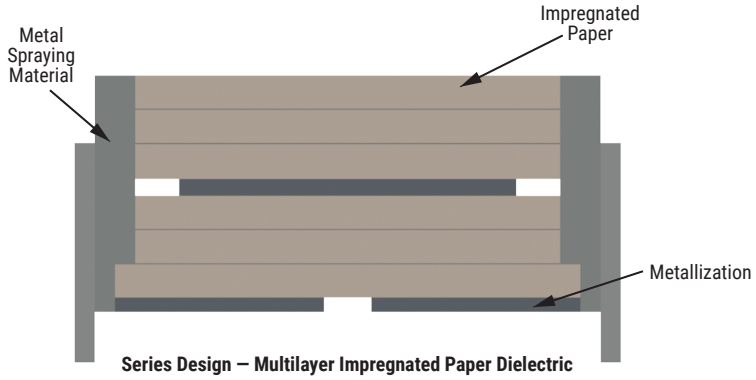


**Series Design — Multilayer Impregnated Paper Dielectric**
**2 Section**



Downloaded from Arrow.com.

## Marking

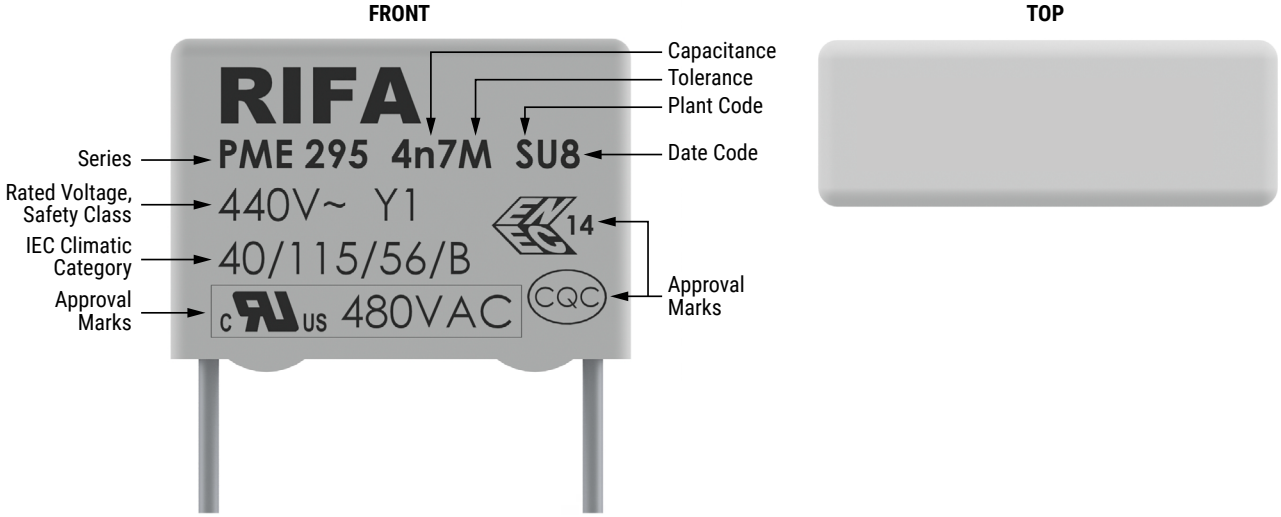


| Manufacturing Date Code (IEC 60062) | | | | | | | | | |
|---|---|---|---|---|---|---|---|---|---|
| Year | Code | Year | Code | Year | Code | Month | Code | Month | Code |
| 2020 | M | 2027 | V | 2034 | E | January | 1 | July | 7 |
| 2021 | N | 2028 | W | 2035 | F | February | 2 | August | 8 |
| 2022 | P | 2029 | X | 2036 | H | March | 3 | September | 9 |
| 2023 | R | 2030 | A | 2037 | J | April | 4 | October | O |
| 2024 | S | 2031 | B | 2038 | K | May | 5 | November | N |
| 2025 | T | 2032 | C | 2039 | L | June | 6 | December | D |
| 2026 | U | 2033 | D | 2040 | M | | | | |

## Packaging Quantities

| Lead Spacing (mm) | Thickness (mm) | Height (mm) | Length (mm) | Bulk Short Leads | Bulk Long Leads | Standard Reel 360 mm | Standard Reel Formed |
|---|---|---|---|---|---|---|---|
| Lead and Packaging Code | | | | C/R06 | A/R30 | L/R19T0 | XLTF1/R25X2 |
| 15 | 5.5 | 12.5 | 18.0 | 1,000 | 500 | 600 | - |
| | 7.5 | 14.5 | 18.0 | 600 | 400 | 400 | 350 |
| | 6.5 | 12.5 | 18.0 | 600 | 400 | 400 | 400 |
| | 8.5 | 16 | 18.0 | 400 | 250 | 400 | - |



Downloaded from Arrow.com.

## Lead Taping & Packaging (IEC 60286-2)

**Lead Spacing 5 mm**

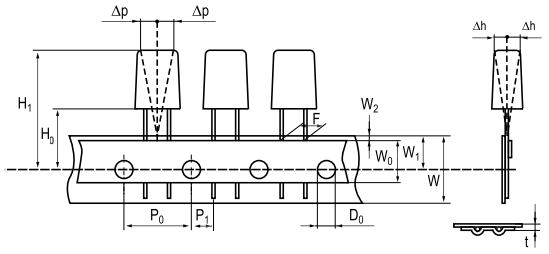


**Lead Spacing 7.5 mm**

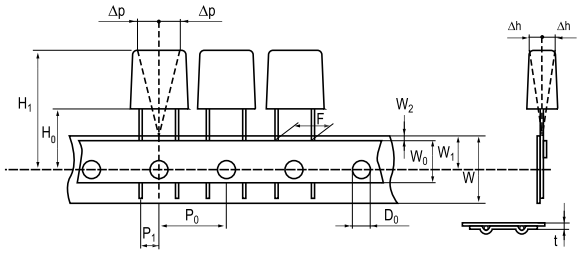


**Lead Spacing 10 – 15mm**

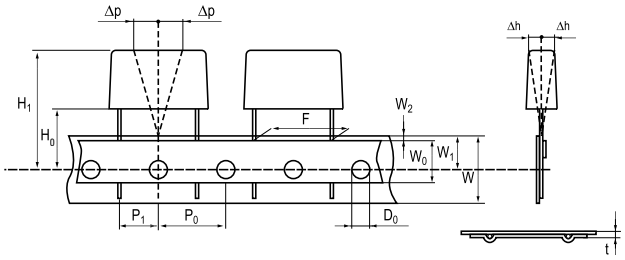


**Lead Spacing 22.5 – 27.5 mm**

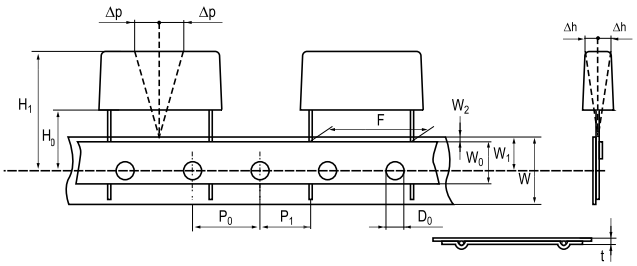


**Formed Leads from 10 and 15 mm to 7.5 mm**

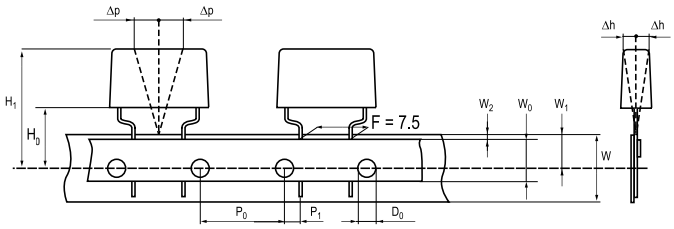


## Taping Specification

| Dimensions in mm | | | | | | | | | | Standard IEC 60286-2 |
|---|---|---|---|---|---|---|---|---|---|---|
| Lead spacing | +0.6/−0.1 | F | 5 | 7.5 | Formed 7.5 | 10 | 15 | 22.5 | 27.5 | F |
| Carrier tape width | ±0.5 | W | 18 | 18 | 18 | 18 | 18 | 18 | 18 | 18 +1/−0.5 |
| Hold-down tape width | Minimum | $W_0$ | 5 | 5 | 5 | 5 | 5 | 5 | 5 | |
| Position of sprocket hole | ±0.5 | $W_1$ | 9 | 9 | 9 | 9 | 9 | 9 | 9 | 9 +0.75/−0.5 |
| Distance between tapes | Maximum | $W_2$ | 3 | 3 | 3 | 3 | 3 | 3 | 3 | 3 |
| Sprocket hole diameter | ±0.2 | $D_0$ | 4 | 4 | 4 | 4 | 4 | 4 | 4 | 4 |
| Feed hole lead spacing | ±0.3 | $P_0$ (1) | 12.7 | 12.7 | 12.7 (4) | 12.7 | 12.7 | 12.7 | 12.7 | 12.7 |
| Distance lead – feed hole | ±0.7 | $P_1$ | 3.85 | 3.75 | 3.75 | 7.7 | 5.2 | 5.3 | 5.3 | P1 |
| Deviation tape – plane | Maximum | Δ p | 1.3 | 1.3 | 1.3 | 1.3 | 1.3 | 1.3 | 1.3 | 1.3 |
| Lateral deviation | Maximum | Δ h | 2 | 2 | 2 | 2 | 2 | 2 | 2 | 2 |
| Total thickness | ±0.2 | t | 0.7 | 0.7 | 0.7 | 0.7 | 0.7 | 0.9 Maximum | 0.9 Maximum | 0.9 Maximum |
| Sprocket hole/cap body | Nominal | $H_0$ (2) | 18.5±0.5 | 18.5±0.5 | 18.5±0.5 | 18.5±0.5 | 18.5±0.5 | 18.5±0.5 | 18.5±0.5 | 18.0 +2/−0 |
| Sprocket hole/ top of cap body | Maximum | $H_1$ (3) | 32 | 31 | 43 | 43 | 43 | 58 | 58 | 58 Maximum |

*(1) Maximum cumulative feed hole error, 1 mm per 20 parts*
*(2) 16.5 mm available on request*
*(3) Depending on case size*
*(4) 15 mm available on request*



Downloaded from Arrow.com.

# Lead Taping & Packaging (IEC 60286-2) cont.

## Ammo Specifications

| Series | Dimensions (mm) | | |
|---|---|---|---|
| | H | W | T |
| R4x, R4x+R, R7x, RSB | 360 | 340 | 59 |
| F5A, F5B, F5D | | | |
| F6xx, F8xx | | | |
| PHExxx, PMExxx, PMRxxx, SMR & PFR | 330 | 330 | 50 |

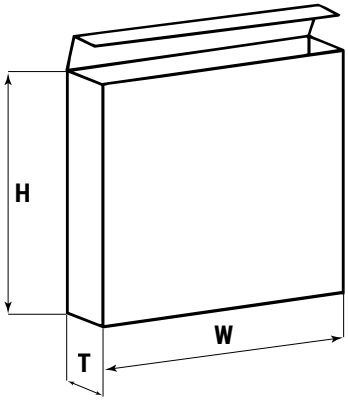


## Reel Specifications

| Series | Dimensions (mm) | | |
|---|---|---|---|
| | D | H | W |
| R4x, R4x+R, R7x, RSB | 355<br>500 | 30<br>25 | 55 (Max) |
| F5A, F5B, F5D | | | |
| F6xx, F8xx | | | |
| PHExxx, PMExxx, PMRxxx, SMR & PFR | 360<br>500 | 30 | 46 (Max) |

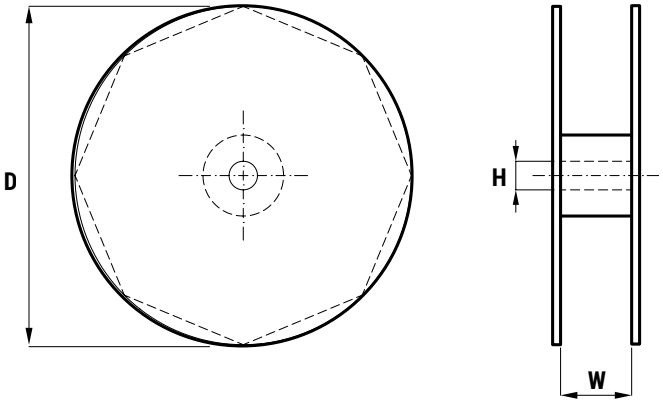




Downloaded from Arrow.com.

## KEMET Electronics Corporation Sales Offices

For a complete list of our global sales offices, please visit https://www.yageogroup.com/SalesResources/SalesOffices

## Disclaimer

YAGEO Corporation and its affiliates do not recommend the use of commercial or automotive grade products for high reliability applications or manned space flight.

All product specifications, statements, information and data (collectively, the "Information") in this datasheet are subject to change. The customer is responsible for checking and verifying the extent to which the Information contained in this publication is applicable to an order at the time the order is placed. All Information given herein is believed to be accurate and reliable, but it is presented without guarantee, warranty, or responsibility of any kind, expressed or implied.

Statements of suitability for certain applications are based on KEMET Electronics Corporation's ("KEMET") knowledge of typical operating conditions for such applications, but are not intended to constitute – and KEMET specifically disclaims – any warranty concerning suitability for a specific customer application or use. The Information is intended for use only by customers who have the requisite experience and capability to determine the correct products for their application. Any technical advice inferred from this Information or otherwise provided by KEMET with reference to the use of KEMET's products is given gratis, and KEMET assumes no obligation or liability for the advice given or results obtained.

Although KEMET designs and manufactures its products to the most stringent quality and safety standards, given the current state of the art, isolated component failures may still occur. Accordingly, customer applications which require a high degree of reliability or safety should employ suitable designs or other safeguards (such as installation of protective circuitry or redundancies) in order to ensure that the failure of an electrical component does not result in a risk of personal injury or property damage.

Although all product–related warnings, cautions and notes must be observed, the customer should not assume that all safety measures are indicated or that other measures may not be required.

Additional information about production site flexibility can be found <here>

*KEMET is a registered trademark of KEMET Electronics Corporation.*



Downloaded from Arrow.com.