© – TE Connectivity. All Rights Reserved.

REVISIONS					
P	LTR	DESCRIPTION	DATE	DWN	APVD
	D	REVISED PER ECR-26-273213	13MAY2026	CM	JP

1 UNIT ACCEPTS 1.14[.045] SQUARE OR ROUND POST.

2 UNIT ACCEPTS STANDARD SL-156 CONTACTS.

3 UNIT ACCEPTS KEYING PLUG 640254-1 AND KEYING PIN 640255-1.

△4 IDENTIFICATION NUMBER FOR ALL POSITIONS, OR FOR POSITION 1 ONLY, WILL BE LOCATED AS SHOWN.

△5 OPTIONAL CONSTRUCTION, BOTH ENDS.

6 DIMENSIONS IN BRACKETS ARE IN INCHES.

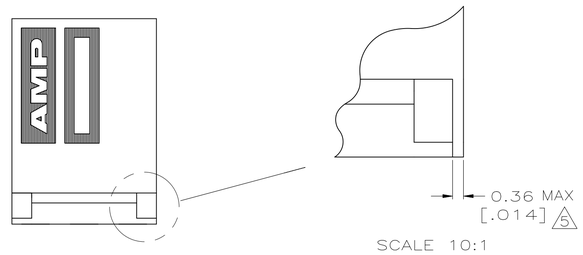

SCALE 10:1

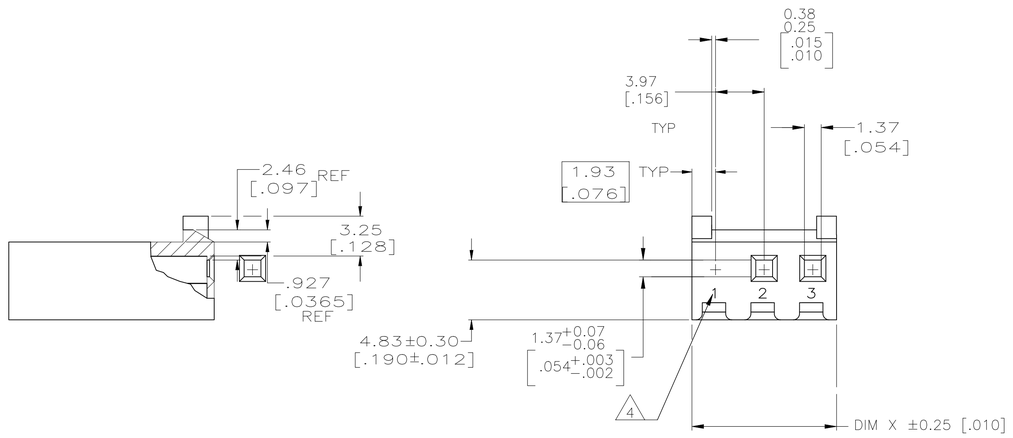

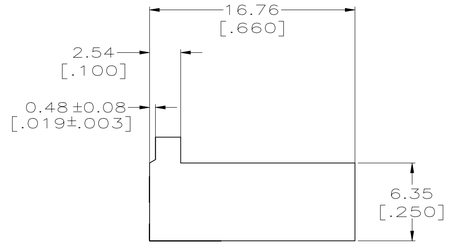

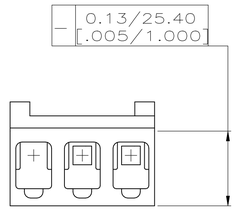

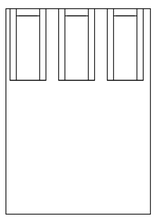

DIM X	NO OF POSN	PART NUMBER
19.74 [.777]	5	2149087-5
11.80 [.465]	3	2149087-3
~~11.80 [.465]~~	~~3~~	~~2149087-1~~

SUPERSEDED

METRIC

THIS DRAWING IS A CONTROLLED DOCUMENT.

DIMENSIONS: mm [INCHES]

TOLERANCES UNLESS OTHERWISE SPECIFIED:
0 PLC ± –
1 PLC ± –
2 PLC ± –
3 PLC ± 0.13 [.005]
4 PLC ± –
ANGLES ± –

MATERIAL: NYLON,UL 94V-0

FINISH: –

DWN D. HUMBERT 06AUG2010
CHK J. EABY 06AUG2010
APVD J. EABY 06AUG2010
PRODUCT SPEC –
APPLICATION SPEC –
WEIGHT 0.000000
CUSTOMER DRAWING

TE Connectivity

NAME: HOUSING WITH LOCKING RAMP AND POLARIZING TABS, POSITION 1 BLOCKED, SL-156

SIZE	CAGE CODE	DRAWING NO	RESTRICTED TO
A1	00779	C-2149087	–

SCALE	SHEET	REV
4:1	1 OF 1	D

4805 (1/15)

Downloaded from Arrow.com.