TIN LEAD PART NUMBER

PART NUMBER	HM1F53FDP400H6

LEAD FREE PART NUMBER

PART NUMBER	HM1F53FDP400H6LF

0.76 um Au & LEAD FREE PART NUMBER

F PART NUMBER	HM1F53FDP400HELF

LAYOUT FOR P.C.B

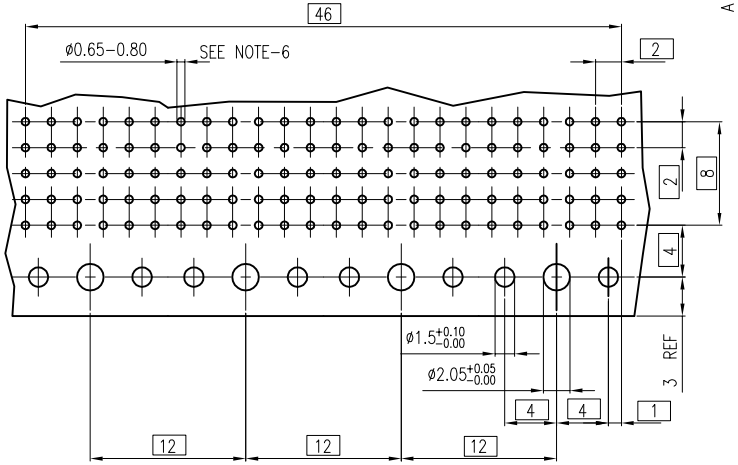

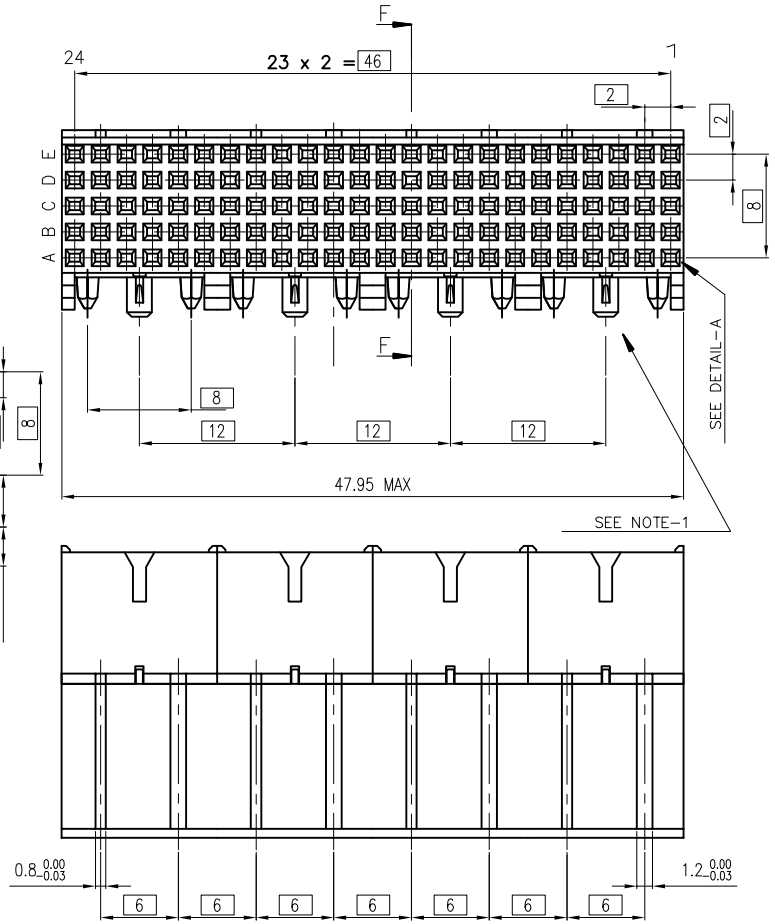

DETAIL–A

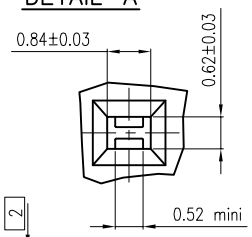

SECTION–FF

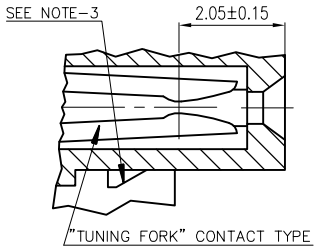

DETAIL OF PRESS–IN PEGS

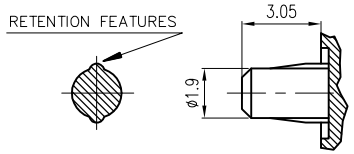

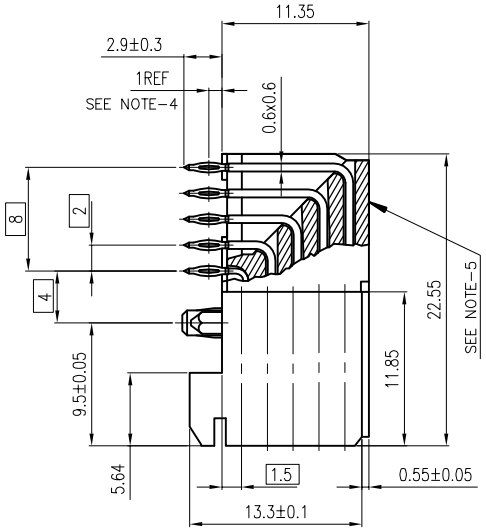

GENERAL CHARACTERISTICS AND ROHS INFORMATIONS:

SEE GS–12–447

NOTE–1: PRESS–IN RETENTION PEG

NOTE–2: CONNECTORS WITH PCB–2.4mm ARE COMPATIBLE WITH WIDE AND NARROW BODIES

NOTE–3: PLUG FOR CODING KEY FIXING

NOTE–4: EYE OF THE NEEDLE PRESS–FIT CTS TYPE

NOTE–5: FLAT ROCK INSERTION TOOLING IN PCB, SEE DRW REF: C–8626–1003

NOTE–6: METALIZED HOLE DEFINITION, SEE GS–12–447

NOTE–7: STANDARD PACKAGING IS IN TUBE ,BUT IF SUFFIX "P" IS ADDED IN P/N ,PACKAGING IS IN TRAYS ,BUT CONNECTOR MARKING IS WITHOUT "P"
Example: HM1FxxxxxxxxH6PLF, marking: HM1FxxxxxxxxH6LF

SPECIFIC DATAS:

VISUAL INSPECTION: 100%
- marking failure
- housing material failure
- spoilt housing
- stained housing
- broken contacts (twisted or loosen)

rev	ecn no	dr	date
A	–	–	2002/08/13
B	LS05–004	MLE	2005/02/23
C	LS06–0095	LGO	2006/07/07
D	LS06–0159	MLE	2006/10/24
E	LS07–0266	MLE	2007/11/09
F	ELX–DG–19619	MIC	2014/12/03
–	–	–	–

European Views

www.fciconnect.com			surface ISO 1302	tolerance std ISO 406 ISO 1101	projection	mm
			TOLERANCES UNLESS OTHERWISE SPECIFIED			
Dr			ANGULAR	LINEAR 0.X ±0.1	size A3	Scale 2.5
Eng	Michael Song	2014/12/03		0.XX ±0.1		
Chr	Zhen Luo	2014/12/03	0.XX° ±2°	0.XXX ±0.1	ECN ELX–DG–19619	
Appr	Collins Lu	2014/12/03	Product family	METRAL	Spec ref –	
title	METRAL FEMALE 5 ROW 120 CTS RIGHT ANGLE PRESS FIT SPECIF 400				dwg no C–8626–11186	Rev. F
	catalog no –				CUSTOMER	sheet 1 of 1

REV F – 2006–04–17

Copyright FCI.

Downloaded from Arrow.com.