NOTES:

1. MATERIALS AND FINISHES:
   BODY - BRASS, GOLD PLATING
   SLEEVE, LOCK WASHER & SPANNER NUT - BRASS, NICKEL PLATING
   CONTACT - BeCu, GOLD PLATING
   INSULATOR - PTFE, NATURAL
   INSULATOR SLEEVE - DELRIN, NATURAL

2. ELECTRICAL:
   A. IMPEDANCE: 75 OHM
   B. FREQUENCY RANGE: DC - 18 GHz
   C. RETURN LOSS: 25 dB MIN. DC - 6 GHz
      20 dB MIN. 6 - 12 GHz
   D. DIELECTRIC WITHSTANDING VOLTAGE: 1000 VRMS, MIN.
   E. INSULATION RESISTANCE: 10,000 MΩ MIN.

3. MECHANICAL:
   A. DURABILITY: 500 CYCLES MIN.
   B. TEMPERATURE RANGE: -40°C TO 85°C

4. PACKAGING:
   A. QUANTITY: SINGLE PACK
   B. MARKING: PACKAGING TO BE MARKED
      "AMPHENOL RF, 34-1139-12G, DATE CODE"

REVISIONS

REV	DESCRIPTION	DATE	ECN	APPR
A	RELEASE TO MFG.	10-Feb-21	15577	S.HSIEH

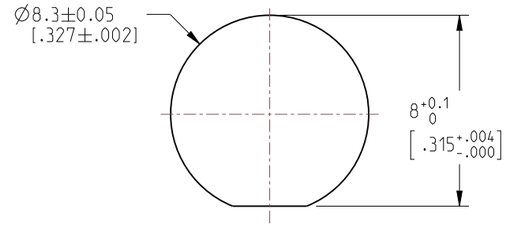

RECOMMENDED PANEL CUTOUT DIMENSIONS

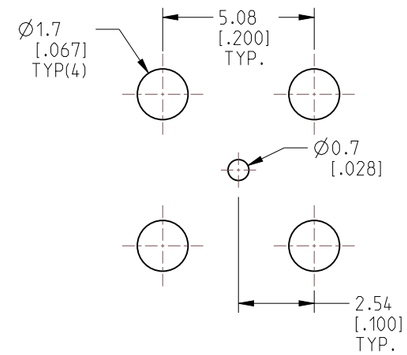

RECOMMNEDED PCB HOLE DIMENSIONS

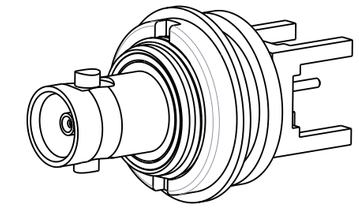

SCALE 3.000

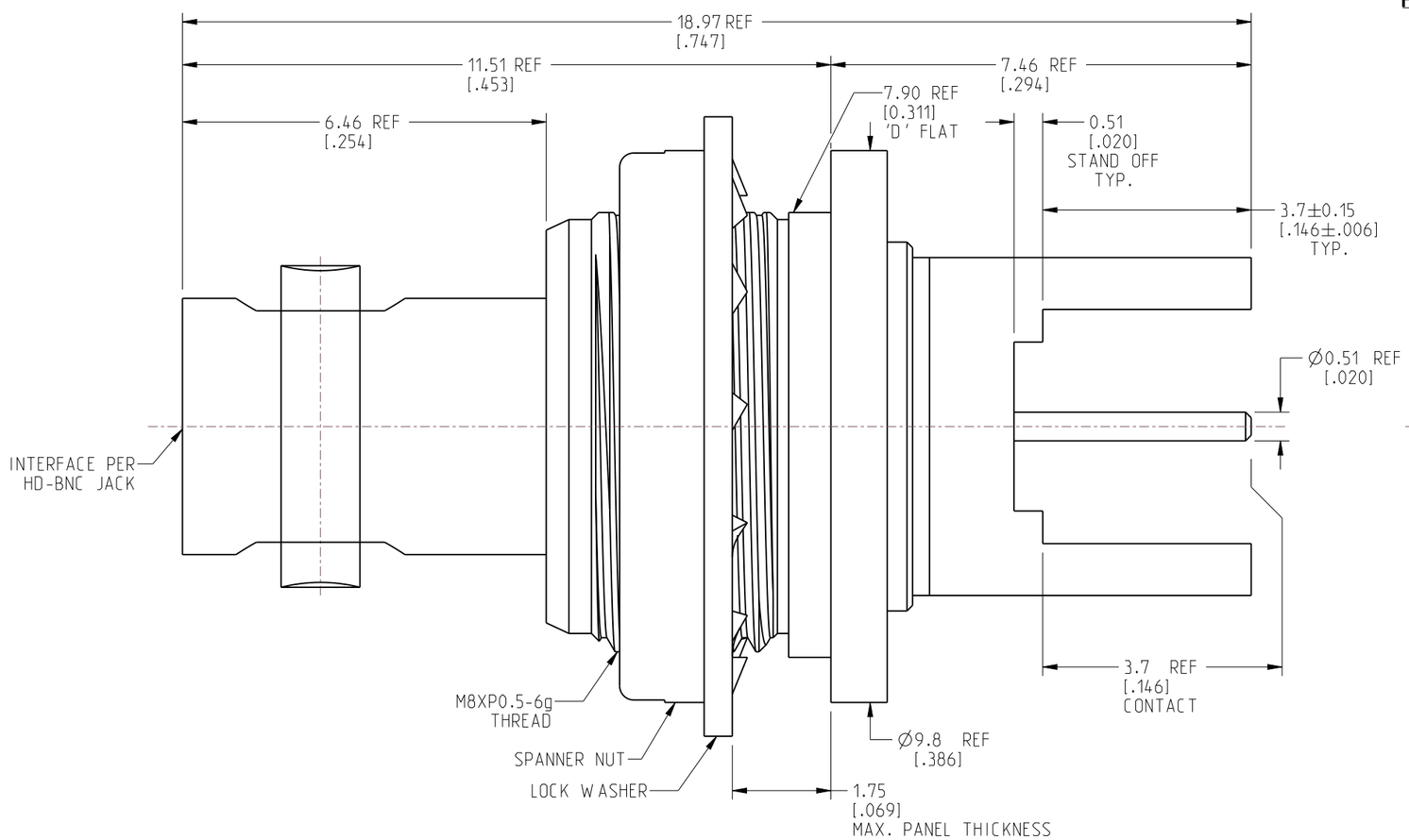

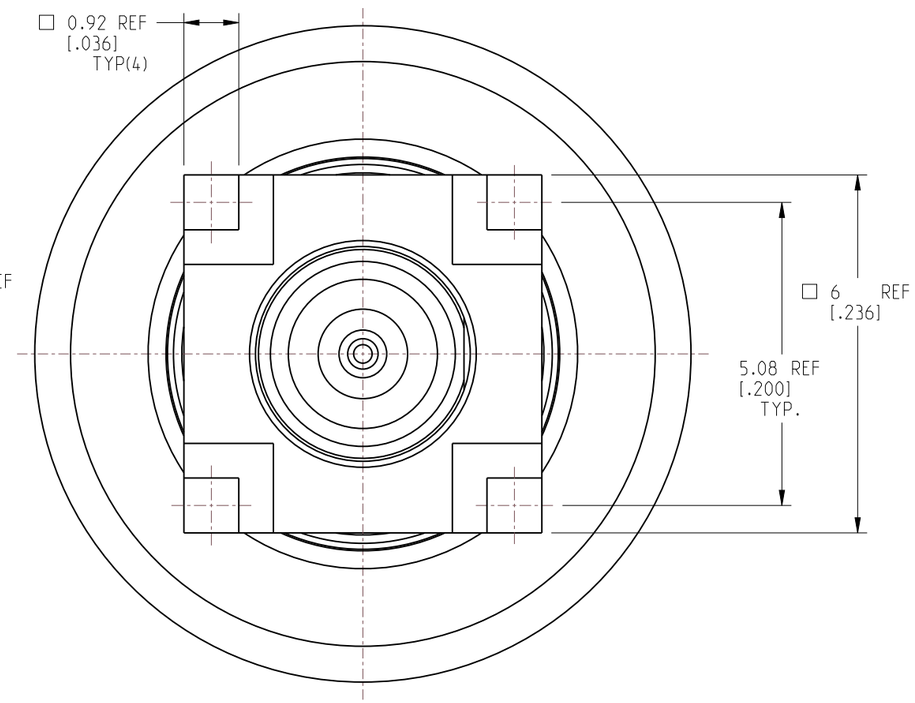

CUSTOMER OUTLINE DRAWING

ALL OTHER SHEETS ARE FOR INTERNAL USE ONLY

NOTICE: These drawings, specifications, or other data (1) are, and remain the property of Amphenol corp. (2) must be returned upon request; and (3) are confidential and not to be disclosed to any person other than those to whom they are given by Amphenol Corp. The furnishing of these drawings, specifications, or other data by Amphenol Corp., or to any other person to anyone for any purpose is not to be regarded by implication or otherwise in any manner licensing, granting rights to permitting such holder or any other person to manufacture, use or sell any product, process or design, patented or otherwise, that may in any way be related to or disclosed by said drawings, specifications, or other data.

THIRD ANGLE PROJ.

REFERENCE	EAR#
	9522

UNLESS OTHERWISE SPECIFIED
DIMENSIONS ARE METRIC [INCHES] AND TOLERANCES ARE:

<0.5mm = ±0.05mm	[<0.020 = ±0.002]
>0.5 - 6mm = ±0.1mm	[>0.020 - 0.236 = ±0.004]
>6.00 - 30mm = ±0.2mm	[>0.236 - 1.181 = ±0.008]
>30.00 - 120mm = ±0.3mm	[>1.181 - 4.725 = ±0.012]

ANGLES = ±1°

MATERIAL: SEE NOTES

ENGINEER: W IKI

DATE: 3-Feb-21

TITLE: HD BNC STR BHD ISOLATED JACK THRU HOLE PCB MOUNT

SHEET NO. 2 OF 2

SCALE: 10.0:1.0

Amphenol RF

SIZE	DRAWING NO.	REV
B	34-1139-12G	A
	ITEM NO. 34-1139-12G	
	PART NO. 34-1139-12G	

Downloaded from Arrow.com.