BCZ 3.81/02/180F SN GN BX

Weidmüller Interface GmbH & Co. KG
Klingenbergstraße 26
D-32758 Detmold
Germany

www.weidmueller.com

Product image

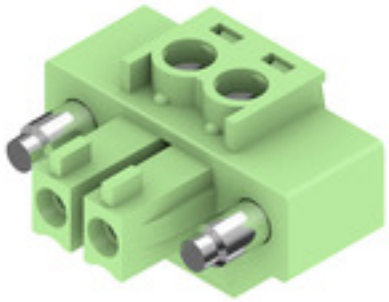

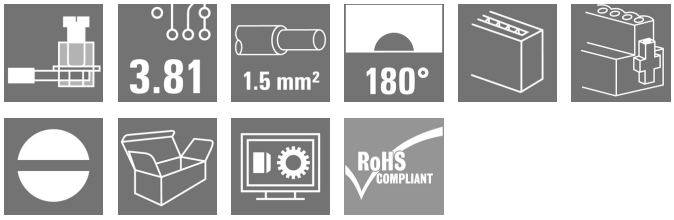

Female socket connectors with clamping-yoke screw system for connecting wires.
Three wire-outlet directions are available and provide flexible connection-level design options:

- 180° wire parallel to plugging direction
- 90° wire perpendicular and above plugging direction
- 270° wire perpendicular and below plugging direction

There are three housing shapes, covering many different requirements, to choose from:

- Standard housing without flange
- Flange with screw (F)
- Flange featuring Weidmüller's patented release latch (LR) for lock-and-release latching with no strain and no tools needed.

Weidmüller's 3.81-mm-pitch (0.15 inch) plug-in connectors are compatible with the layouts of customary connectors and offer space for labelling and coding.

General ordering data

Version	PCB plug-in connector, female plug, 3.81 mm, Number of poles: 2, 180°, Clamping yoke connection, Clamping range, max. : 1.5 mm², Box
Order No.	1793040000
Type	BCZ 3.81/02/180F SN GN BX
GTIN (EAN)	4032248227129
Qty.	50 pc(s).
Product data	IEC: 320 V / 17.5 A / 0.2 - 1.5 mm² UL: 300 V / 10 A / AWG 28 - AWG 16
Packaging	Box

Downloaded from Arrow.com.

BCZ 3.81/02/180F SN GN BX

Weidmüller Interface GmbH & Co. KG
Klingenbergstraße 26
D-32758 Detmold
Germany

www.weidmueller.com

Technical data

Dimensions and weights

Depth	16.1 mm	Depth (inches)	0.634 inch
Height	11.1 mm	Height (inches)	0.437 inch
Width	18.04 mm	Width (inches)	0.71 inch
Net weight	2.7 g		

System Parameters

Product family	OMNIMATE Signal - series BC/SC 3.81
Type of connection	Field connection
Wire connection method	Clamping yoke connection
Pitch in mm (P)	3.81 mm
Pitch in inches (P)	0.15 "
Conductor outlet direction	180°
Number of poles	2
L1 in mm	3.81 mm
L1 in inches	0.15 "
Number of rows	1
Pin series quantity	1
Rated cross-section	1 mm²
Touch-safe protection acc. to DIN VDE 57 106	Safe from finger touch
Touch-safe protection acc. to DIN VDE 0470	IP20 plugged/ IP10 unplugged
Protection degree	IP20
Volume resistance	≤5 mΩ
Can be coded	Yes
Stripping length	7 mm
Clamping screw	M 2
Screwdriver blade	0.4 x 2.5
Screwdriver blade standard	DIN 5264
Plugging cycles	25
Plugging force/pole, max.	7 N
Pulling force/pole, max.	5 N

Tightening torque				
	Torque type	Wire connection		
	Usage information	Tightening torque	min.	0.2 Nm
			max.	0.25 Nm
	Torque type	Screw flange		
	Usage information	Tightening torque	min.	0.15 Nm
			max.	0.2 Nm

Material data

Insulating material	PA 66 GF 30	Colour	green
Colour chart (similar)	RAL 6032	Insulating material group	II
Comparative Tracking Index (CTI)	≥ 550	UL 94 flammability rating	V-0
Contact material	Cu-alloy	Contact surface	tinned
Layer structure of plug contact	0.5...1.5 µm Cu / 2...5 µm Sn	Storage temperature, min.	-40 °C
Storage temperature, max.	70 °C	Operating temperature, min.	-50 °C
Operating temperature, max.	120 °C	Temperature range, installation, min.	-25 °C
Temperature range, installation, max.	120 °C		

Conductors suitable for connection

Clamping range, min.	0.08 mm²

Downloaded from Arrow.com.

BCZ 3.81/02/180F SN GN BX

Weidmüller Interface GmbH & Co. KG
Klingenbergstraße 26
D-32758 Detmold
Germany

www.weidmueller.com

Technical data

Clamping range, max.	1.5 mm²
Wire connection cross section AWG, min.	AWG 28
Wire connection cross section AWG, max.	AWG 16
Solid, min. H05(07) V-U	0.2 mm²
Solid, max. H05(07) V-U	1.5 mm²
Flexible, min. H05(07) V-K	0.2 mm²
Flexible, max. H05(07) V-K	1.5 mm²
w. plastic collar ferrule, DIN 46228 pt 4, min.	0.2 mm²
w. plastic collar ferrule, DIN 46228 pt 4, max.	1.5 mm²
w. wire end ferrule, DIN 46228 pt 1, min.	0.2 mm²
w. wire end ferrule, DIN 46228 pt 1, max.	1.5 mm²
Plug gauge in accordance with EN 60999 a x b; ø	2.4 mm x 1.5 mm

Clampable conductor	Cross-section for conductor connection	Type	fine-wired	
		nominal	0.5 mm²	
	wire end ferrule	Stripping length	nominal	6 mm
		Recommended wire-end ferrule	H0,5/6	
	Cross-section for conductor connection	Type	fine-wired	
		nominal	0.75 mm²	
	wire end ferrule	Stripping length	nominal	6 mm
		Recommended wire-end ferrule	H0,75/6	
	Cross-section for conductor connection	Type	fine-wired	
		nominal	1 mm²	
	wire end ferrule	Stripping length	nominal	6 mm
		Recommended wire-end ferrule	H1,0/6	
	Cross-section for conductor connection	Type	fine-wired	
		nominal	1.5 mm²	
	wire end ferrule	Stripping length	nominal	7 mm
		Recommended wire-end ferrule	H1,5/7	
Reference text	The outside diameter of the plastic collar should not be larger than the pitch (P), Length of ferrules is to be chosen depending on the product and the rated voltage.			

Rated data acc. to IEC

tested acc. to standard	IEC 60664-1, IEC 61984	Rated current, min. number of poles (Tu=20°C)	17.5 A
Rated current, max. number of poles (Tu=20°C)	17.5 A	Rated current, min. number of poles (Tu=40°C)	17 A
Rated current, max. number of poles (Tu=40°C)	15.2 A	Rated voltage for surge voltage class / pollution degree II/2	320 V
Rated voltage for surge voltage class / pollution degree III/2	160 V	Rated voltage for surge voltage class / pollution degree III/3	160 V
Rated impulse voltage for surge voltage class/ pollution degree II/2	2.5 kV	Rated impulse voltage for surge voltage class/ pollution degree III/2	2.5 kV
Rated impulse voltage for surge voltage class/ contamination degree III/3	2.5 kV	Short-time withstand current resistance	3 x 1s with 76 A

Downloaded from Arrow.com.

BCZ 3.81/02/180F SN GN BX

Weidmüller Interface GmbH & Co. KG
Klingenbergstraße 26
D-32758 Detmold
Germany

www.weidmueller.com

Technical data

Rated data acc. to CSA

Institute (CSA)		Certificate No. (CSA)	
			200039-1121690
Rated voltage (Use group B / CSA)	300 V	Rated voltage (Use group C / CSA)	50 V
Rated current (Use group B / CSA)	8 A	Rated current (Use group C / CSA)	8 A
Wire cross-section, AWG, min.	AWG 28	Wire cross-section, AWG, max.	AWG 16
Reference to approval values	Specifications are maximum values, details - see approval certificate.		

Rated data acc. to UL 1059

Institute (cURus)		Certificate No. (cURus)	
			E60693
Rated voltage (Use group B / UL 1059)	300 V	Rated voltage (Use group D / UL 1059)	300 V
Rated current (Use group B / UL 1059)	10 A	Rated current (Use group D / UL 1059)	10 A
Wire cross-section, AWG, min.	AWG 28	Wire cross-section, AWG, max.	AWG 16
Reference to approval values	Specifications are maximum values, details - see approval certificate.		

Packing

Packaging	Box	VPE length	99 mm
VPE width	91 mm	VPE height	39 mm

Type tests

Test: Durability of markings	Standard	DIN EN 61984 section 7.3.2 / 09.02 taking pattern from DIN EN 60068-2-70 / 07.96
	Test	mark of origin, type identification, rated voltage, rated cross-section, pitch, type of material, approval marking UL, approval marking CSA
	Evaluation	available
	Test	durability
	Evaluation	passed
Test: Misengagement (Non-interchangeability)	Standard	DIN EN 61984 section 6.3 and 6.9.1 / 09.02, DIN EN 60512-13-5 / 11.06
	Test	180° turned without coding elements
	Evaluation	passed
	Test	visual examination
	Evaluation	passed

Downloaded from Arrow.com.

BCZ 3.81/02/180F SN GN BX

Weidmüller Interface GmbH & Co. KG
Klingenbergstraße 26
D-32758 Detmold
Germany

www.weidmueller.com

Technical data

Test: Clampable cross section	Standard	DIN EN 60999-1 section 7 and 9.1 / 12.00, DIN EN 60947-1 section 8.2.4.5.1 / 12.02	
	Conductor type	Type of conductor and conductor cross-section	solid 0.08 mm²
		Type of conductor and conductor cross-section	stranded 0.08 mm²
		Type of conductor and conductor cross-section	solid 1.5 mm²
		Type of conductor and conductor cross-section	stranded 1.5 mm²
		Type of conductor and conductor cross-section	AWG 28/1
		Type of conductor and conductor cross-section	AWG 28/19
		Type of conductor and conductor cross-section	AWG 16/1
		Type of conductor and conductor cross-section	AWG 16/19
	Evaluation	passed	
Test for damage to and accidental loosening of conductors	Standard	DIN EN 60999-1 section 9.4 / 12.00	
	Requirement	0.2 kg	
	Conductor type	Type of conductor and conductor cross-section	stranded 0.25 mm²
		Type of conductor and conductor cross-section	AWG 28/1
		Type of conductor and conductor cross-section	AWG 28/19
	Evaluation	passed	
	Requirement	0.3 kg	
	Conductor type	Type of conductor and conductor cross-section	solid 0.5 mm²
	Evaluation	passed	
	Requirement	0.4 kg	
	Conductor type	Type of conductor and conductor cross-section	solid 1.5 mm²
		Type of conductor and conductor cross-section	stranded 1.5 mm²
		Type of conductor and conductor cross-section	AWG 16/1
		Type of conductor and conductor cross-section	AWG 16/19
	Evaluation	passed	

Downloaded from Arrow.com.

BCZ 3.81/02/180F SN GN BX

Weidmüller Interface GmbH & Co. KG
Klingenbergstraße 26
D-32758 Detmold
Germany

www.weidmueller.com

Technical data

Pull-out test	Standard	DIN EN 60999-1 section 9.5 / 12.00	
	Requirement	≥10 N	
	Conductor type	Type of conductor and conductor cross-section	stranded 0.25 mm²
		Type of conductor and conductor cross-section	AWG 28/1
		Type of conductor and conductor cross-section	AWG 28/19
	Evaluation	passed	
	Requirement	≥20 N	
	Conductor type	Type of conductor and conductor cross-section	H05V-U0.5
	Evaluation	passed	
	Requirement	≥40 N	
	Conductor type	Type of conductor and conductor cross-section	H07V-U1.5
		Type of conductor and conductor cross-section	H07V-K1.5
		Type of conductor and conductor cross-section	AWG 16/1
		Type of conductor and conductor cross-section	AWG 16/19
	Evaluation	passed	

Classifications

ETIM 6.0	EC002638	ETIM 7.0	EC002638
ETIM 8.0	EC002638	ETIM 9.0	EC002638
ETIM 10.0	EC002638	ECLASS 9.0	27-44-03-09
ECLASS 9.1	27-44-03-09	ECLASS 10.0	27-44-03-09
ECLASS 11.0	27-46-02-02	ECLASS 12.0	27-46-02-02
ECLASS 13.0	27-46-02-02	ECLASS 14.0	27-46-02-02
ECLASS 15.0	27-46-02-02		

Environmental Product Compliance

RoHS Compliance Status	Compliant with exemption
RoHS Exemption (if applicable/known)	6c
REACH SVHC	Lead 7439-92-1
SCIP	ea9dd4b8-c51f-409c-885a-41700372be61

Downloaded from Arrow.com.

BCZ 3.81/02/180F SN GN BX

Weidmüller Interface GmbH & Co. KG
Klingenbergstraße 26
D-32758 Detmold
Germany

www.weidmueller.com

Technical data

Important note

IPC conformity	Conformity: The products are developed, manufactured and delivered according international recognized standards and norms and comply with the assured properties in the data sheet resp. fulfill decorative properties in accordance with IPC-A-610 "Class 2". Further claims on the products can be evaluated on request.
Notes	• Additional variants on request • Rated current related to rated cross-section & min. No. of poles. • Wire end ferrule without plastic collar to DIN 46228/1 • Wire end ferrule with plastic collar to DIN 46228/4 • P on drawing = pitch • Rated data refer only to the component itself. Clearance and creepage distances to other components are to be designed in accordance with the relevant application standards. • In accordance with IEC 61984, OMNIMATE-connectors are connectors without breaking capacity (COC). During designated use, connectors are not allowed to be engaged or disengaged when live or under load • Long term storage of the product with average temperature of 50 °C and maximum humidity 70%, 36 months

Approvals

Approvals	
Approvals MAMID	https://mdcop.weidmueller.com/mediadelivery/rendition/900_319226/-T1z1mm-S800/ https://mdcop.weidmueller.com/mediadelivery/rendition/900_319230/-T1z1mm-S800/
ROHS	Conform
UL File Number Search	UL Website
Certificate No. (cURus)	E60693

Downloads

Approval/Certificate/Document of Conformity	CB Certificate CB Testreport Declaration of the Manufacturer
Catalogues	Catalogues in PDF-format
Brochures	FL DRIVES EN MB DEVICE MANUF. EN FL DRIVES DE FL BUILDING SAFETY EN FL APPL LED LIGHTING EN FL INDUSTR.CONTROLS EN FL MACHINE SAFETY EN FL HEATING ELECTR EN FL APPL_INVERTER EN FL_BASE_STATION_EN FL ELEVATOR EN FL POWER SUPPLY EN FL 72H SAMPLE SER EN PO OMNIMATE EN

Downloaded from Arrow.com.

BCZ 3.81/02/180F SN GN BX

Weidmüller Interface GmbH & Co. KG
Klingenbergstraße 26
D-32758 Detmold
Germany

www.weidmueller.com

Drawings

Product image

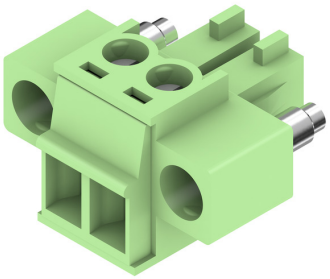

Dimensional drawing

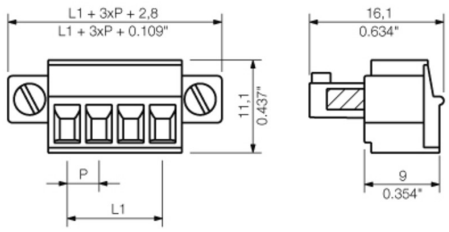

Graph

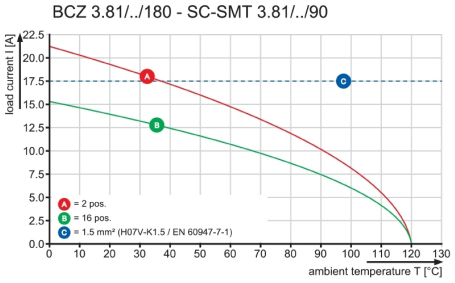

Graph

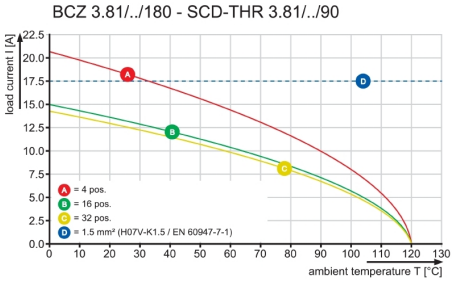

Graph

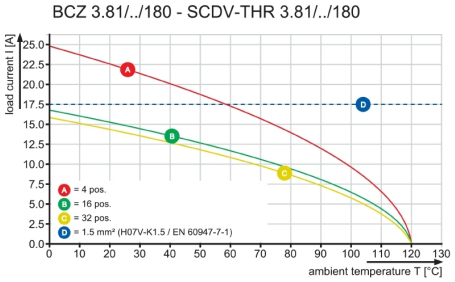

Downloaded from Arrow.com.

Dimensions without tolerances are no check dimensions

The English version is binding

10

BCZ 3.81/.../180 ...

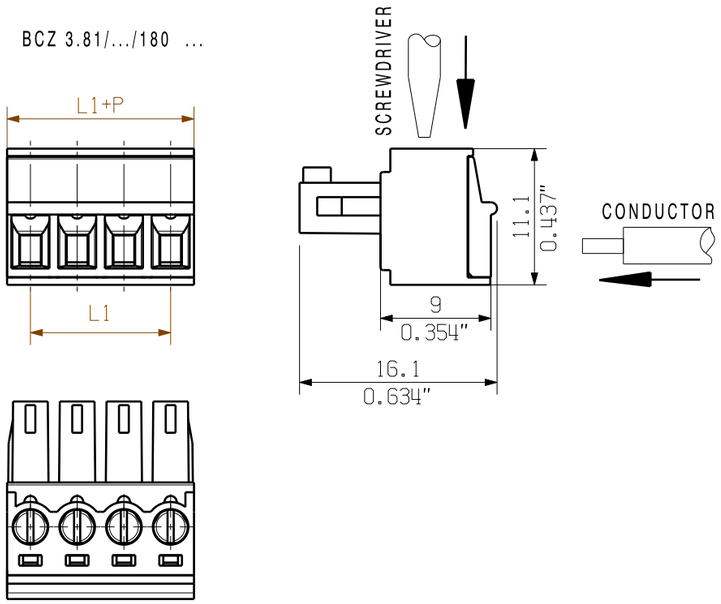

BCZ 3.81/.../180F ...

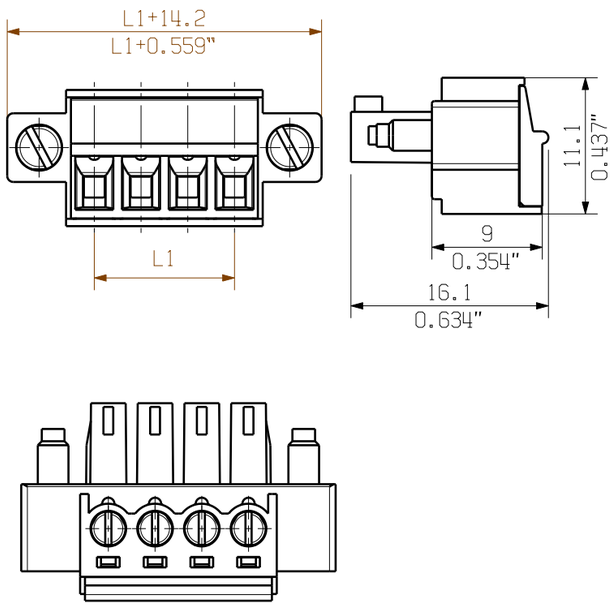

BCZ 3.81/.../180LR ...

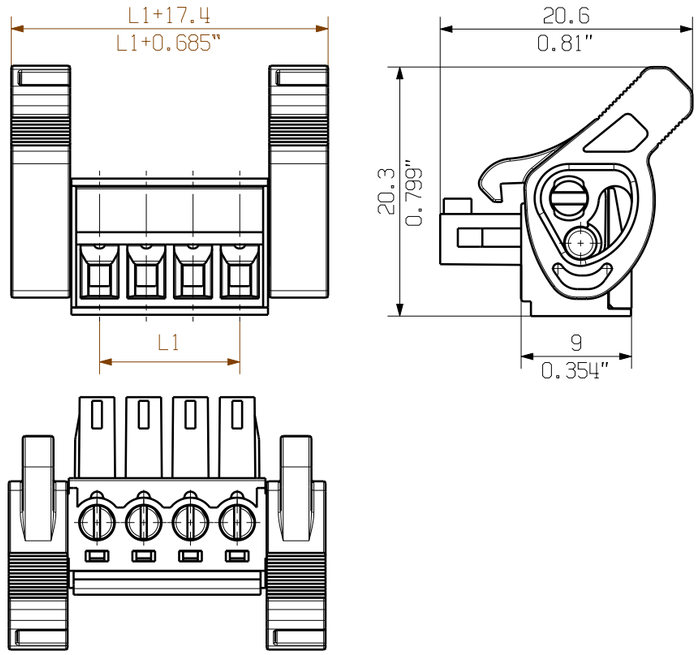

KUNDENZEICHNUNG
CUSTOMER DRAWING

N	L1 [mm]	L1 [inch]
20	72.39	2.850
19	68.58	2.700
18	64.77	2.550
17	60.96	2.400
16	57.15	2.250
15	53.34	2.100
14	49.53	1.950
13	45.72	1.800
12	41.91	1.650
11	38.10	1.500
10	34.29	1.350
9	30.48	1.200
8	26.67	1.050
7	22.86	0.900
6	19.05	0.750
5	15.24	0.600
4	11.43	0.450
3	7.62	0.300
2	3.81	0.150

For the mounting of PCBs, it should be noted that the rated data given in the catalogue relates only to the connection elements. The neccessary creepage and clearance paths must be observed in connection with the respective applicant in accordance to VDE 0110. The current-carrying capacity and pitch tolerance is to be determined according to DIN IEC 326 part 3 very fine.

Weidmüller connectors are tested to the DIN VDE 0627 standard, and are valid for its field of application. Provided that the connectors are used to the intended purpose, all requirements with respect to the occuring of electrical, mechanical, thermic and corrosive stress will be satisfied.

GENERAL TOLERANCE:
DIN ISO 2768-m

RoHS COMPLIANT

Max. nos.

98178/5
16.10.17 MA_J
.
01

Modification

Cat.no.: .

Weidmüller

C 40383 10
Drawing no. Issue no.
Sheet 01 of 06 sheets

	Date	Name
Drawn	21.02.2006	GU_D
Responsible		MA_J
Checked	16.10.2017	ZHOU_N
Approved		XU_S

Scale: 2/1

Supersedes: .

BCZ 3.81/.../180 SN ...

BUCHSENLEISTE
SOCKET BLOCK

Product file: BCZ 3.81 7070

The reproduction, distribution and utilization of this document as well as the communication of its contents to others without explicit authorization is prohibited.
Offenders will be held liable for the payment of damages. Weidmueller exclusively reserves the right to file for patents, utility models or designs.
© Weidmueller Interface GmbH & Co. KG

Downloaded from Arrow.com.