AGAL 09/GP-N
AGAL 09/GP/ME

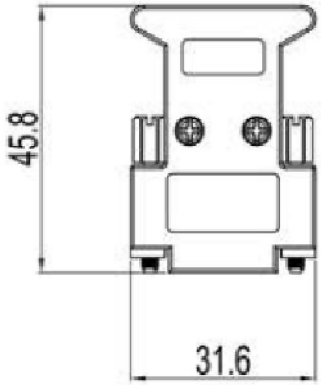

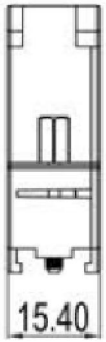

TECHNICAL SPECIFICATION:

Material: UL94V-0 ABS
Operating Temperatur: -55°C to +110°C
Thumbscrews: Short, UNC 4-40

Features:
Available in sizes 9-15-25-37-50

Version:
-N = Black
/ME = Metalized

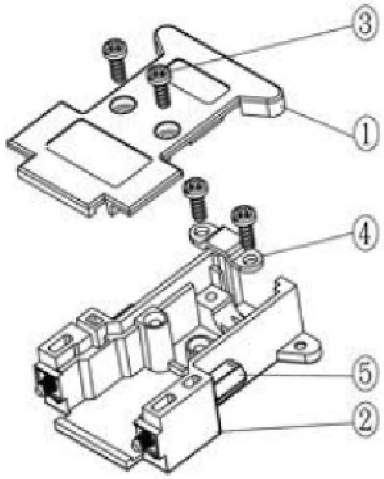

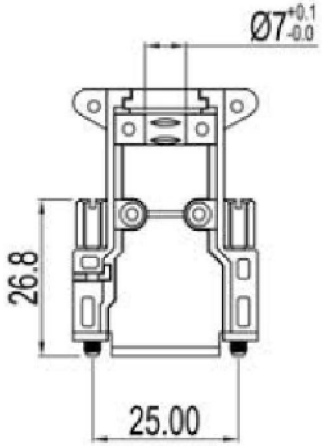

Item	QTY	Part description
1	1	CA09-Upper cover -N = Black /ME = Metalized
2	1	CA09-Lower cover -N = Black /ME = Metalized
3	4	TEL004 Screw
4	1	CA09CC-9Way Clamps
5	2	TAS (4.40) Short Jackscrews

RoHS compliant

Scale	1:1
TOLERANCE	
X.	±X
X.X	±X
X.XX	±X
X°	±X

Id.	Modification	Date	Name
5	change of plant	25.05.2017	S.Bölling
4	add dimension (hole diameter)	05.05.2014	A. Plate
3	Modify drawing	24.09.2009	Dean
2	Update	02.07.2009	Dean
1	Zeichnungs Angleichung	17.04.2007	N.Schulz

	Date	Name
Drawn	17.04.2007	N.Schulz
Approved	24.09.2009	Hellwig

ASSMANN WSW components

Customer-No.

ASSMANN WSW-No. AGAL xx/GP-N
AGAL xx/GP/ME

Drawing-No. ASS 1077 CO rev05

Replace

Sheet 1/5

Downloaded from Arrow.com.

AGAL 15/GP-N
AGAL 15/GP/ME

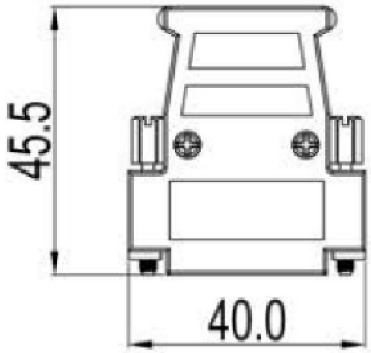

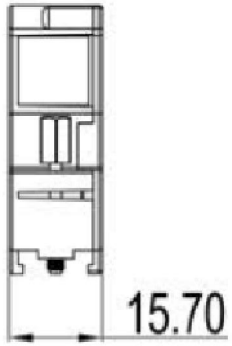

TECHNICAL SPECIFICATION:

Material: UL94V-0 ABS
Operating Temperatur: -55°C to +110°C
Thumbscrews: Short, UNC 4-40

Version:
-N = Black
/ME = Metalized

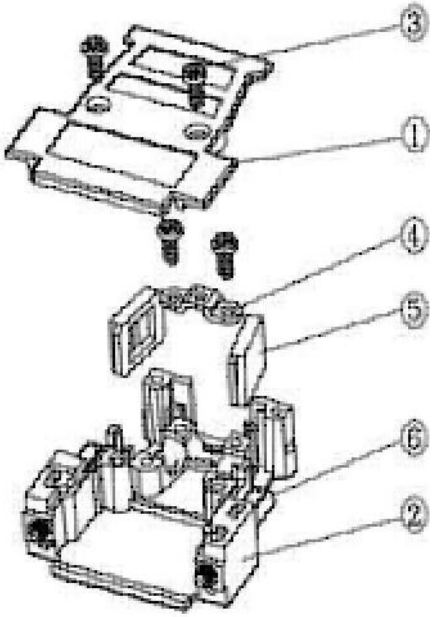

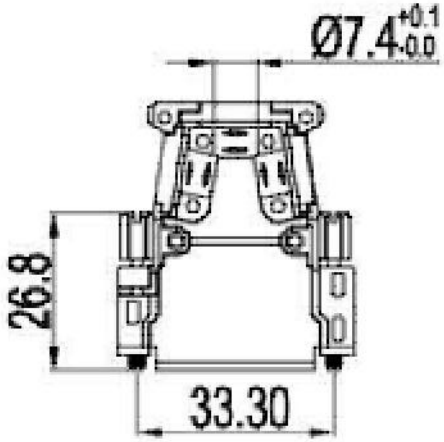

Item	QTY	Part description
1	1	CA15-Upper cover -N = Black /ME = Metalized
2	1	CA15-Lower cover -N = Black /ME = Metalized
3	4	TEL004 Screw
4	1	CA15CC-15Way Clamps
5	2	TAS (4.40) Short Jackscrews

RoHS compliant

Scale	1:1
TOLERANCE	
X.	±X
X.X	±X
X.XX	±X
X°	±X

Id.	Modification	Date	Name		Date	Name
5	change of plant	25.05.2017	S.Bölling	Drawn	17.04.2007	N.Schulz
4	add dimension (hole diameter)	05.05.2014	A. Plate	Approved	24.09.2009	Hellwig
3	Modify drawing	24.09.2009	Dean			
2	Update	02.07.2009	Dean			
1	Zeichnungs Angleichung	17.04.2007	N.Schulz			

ASSMANN WSW components

Customer-No.

ASSMANN WSW-No. AGAL xx/GP-N
AGAL xx/GP/ME

Drawing-No. ASS 1077 CO rev05

Replace

Sheet 2/5

Downloaded from Arrow.com.

AGAL 25/GP-N
AGAL 25/GP/ME

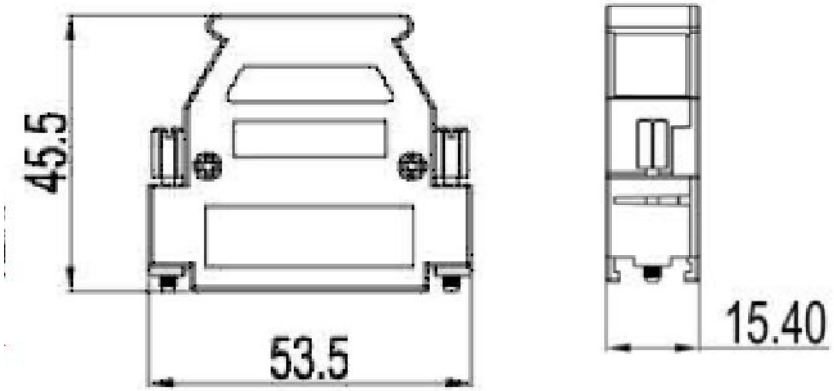

TECHNICAL SPECIFICATION:

Material: UL94V-0 ABS
Operating Temperatur: -55°C to +110°C
Thumbscrews: Short, UNC 4-40

Version:
-N = Black
/ME = Metalized

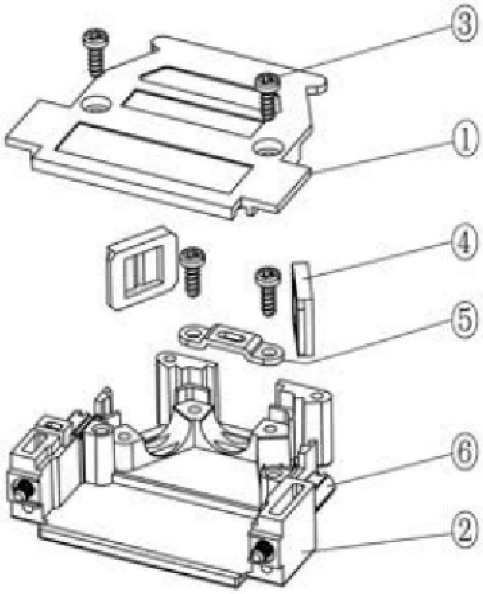

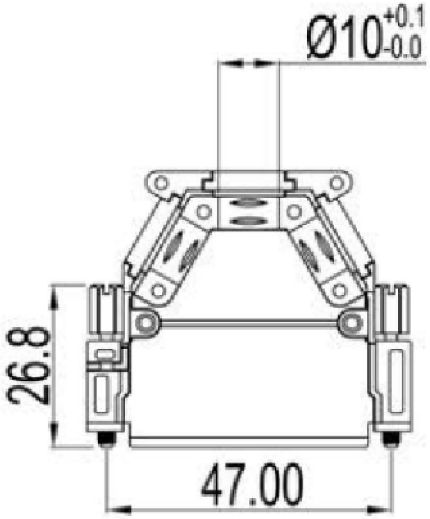

Item	QTY	Part description
1	1	CA25-Upper cover -N = Black /ME = Metalized
2	1	CA25-Lower cover -N = Black /ME = Metalized
3	4	TEL004 Screw
4	1	CA25CC-25Way Clamps
5	2	TAS (4.40) Short Jackscrews

RoHS compliant

Scale	1:1
TOLERANCE	
X.	±X
X.X	±X
X.XX	±X
X°	±X

Id.	Modification	Date	Name
5	change of plant	25.05.2017	S.Bölling
4	add dimension (hole diameter)	05.05.2014	A. Plate
3	Modify drawing	24.09.2009	Dean
2	Update	02.07.2009	Dean
1	Zeichnungs Angleichung	17.04.2007	N.Schulz

	Date	Name
Drawn	17.04.2007	N.Schulz
Approved	24.09.2009	Hellwig

ASSMANN WSW components

Customer-No.

ASSMANN WSW-No. AGAL xx/GP-N
AGAL xx/GP/ME

Drawing-No. ASS 1077 CO rev05

Replace

Sheet 3/5

Downloaded from Arrow.com.

AGAL 37/GP-N
AGAL 37/GP/ME

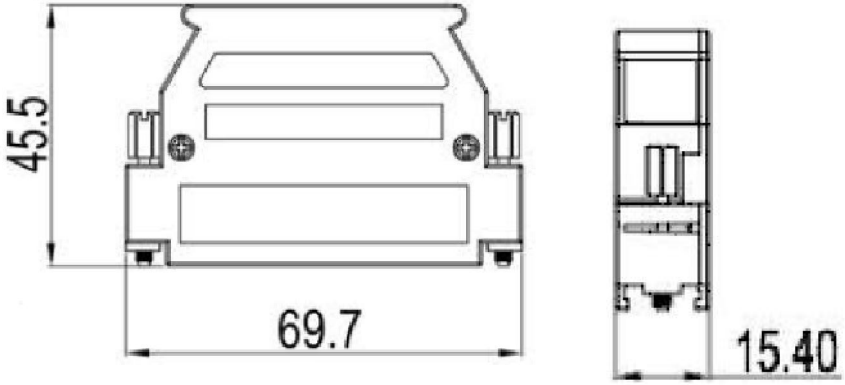

TECHNICAL SPECIFICATION:

Material: UL94V-0 ABS
Operating Temperatur: -55°C to +110°C
Thumbscrews: Short, UNC 4-40

Version:
-N = Black
/ME = Metalized

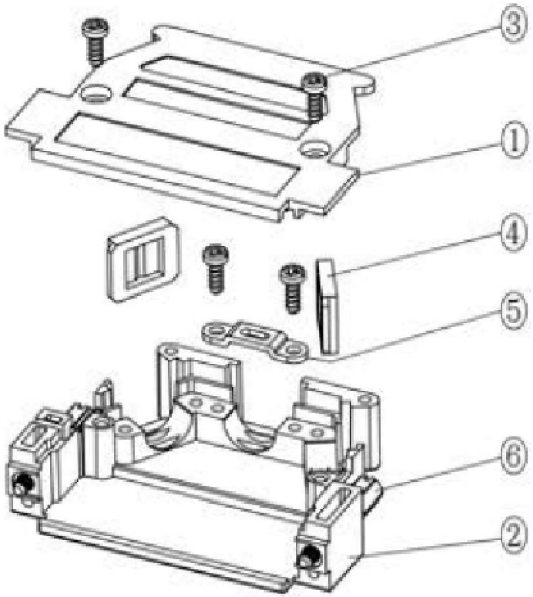

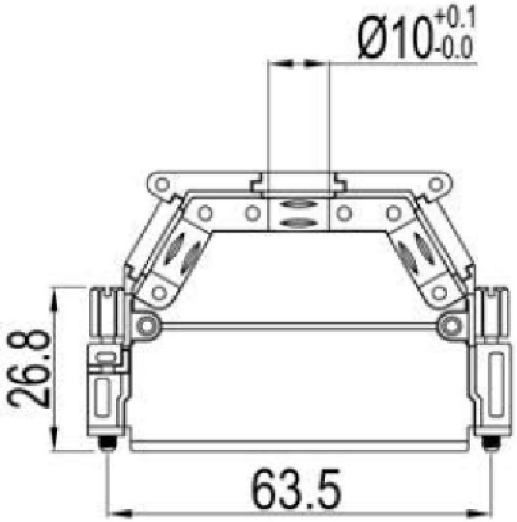

Item	QTY	Part description
1	1	CA37-Upper cover -N = Black /ME = Metalized
2	1	CA37-Lower cover -N = Black /ME = Metalized
3	4	TEL004 Screw
4	1	CA37CC-37Way Clamps
5	2	TAS (4.40) Short Jackscrews

RoHS compliant

Scale	1:1
TOLERANCE	
X.	±X
X.X	±X
X.XX	±X
X°	±X

Id.	Modification	Date	Name		Date	Name
5	change of plant	25.05.2017	S.Bölling	Drawn	17.04.2007	N.Schulz
4	add dimension (hole diameter)	05.05.2014	A. Plate	Approved	24.09.2009	Hellwig
3	Modify drawing	24.09.2009	Dean			
2	Update	02.07.2009	Dean			
1	Zeichnungs Angleichung	17.04.2007	N.Schulz			

ASSMANN WSW components

Customer-No.

ASSMANN WSW-No. AGAL xx/GP-N
AGAL xx/GP/ME

Drawing-No. ASS 1077 CO rev05

Replace

Sheet 4/5

Downloaded from Arrow.com.

AGAL 50/GP-N
AGAL 50/GP/ME

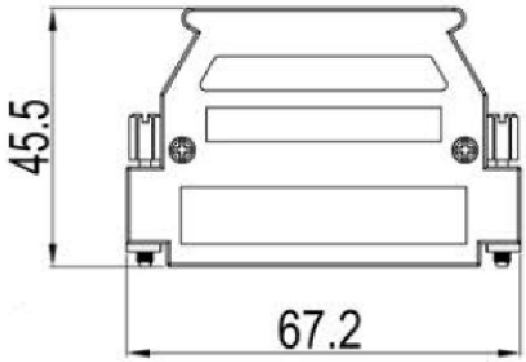

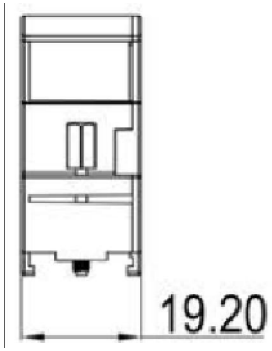

TECHNICAL SPECIFICATION:

Material: UL94V-0 ABS
Operating Temperatur: -55°C to +110°C
Thumbscrews: Short, UNC 4-40

Version:
-N = Black
/ME = Metalized

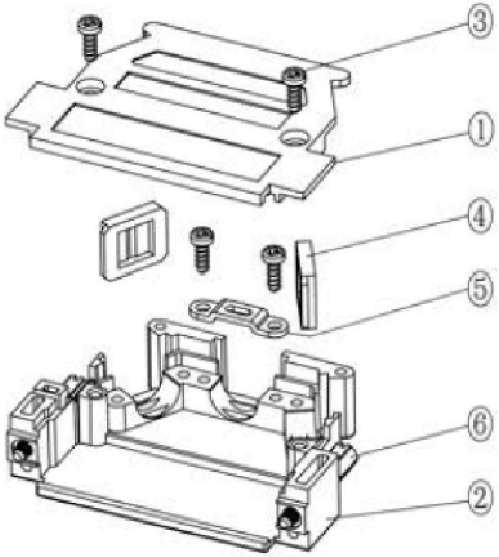

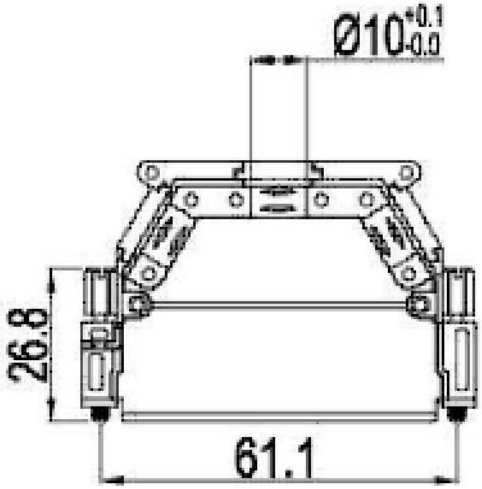

Item	QTY	Part description
1	1	CA50-Upper cover -N = Black /ME = Metalized
2	1	CA50-Lower cover -N = Black /ME = Metalized
3	4	TEL004 Screw
4	1	CA50CC-50Way Clamps
5	2	TAS (4.40) Short Jackscrews

RoHS compliant

Scale	1:1
TOLERANCE	
X.	±X
X.X	±X
X.XX	±X
X°	±X

Id.	Modification	Date	Name		Date	Name
5	change of plant	25.05.2017	S.Bölling	Drawn	17.04.2007	N.Schulz
4	add dimension (hole diameter)	05.05.2014	A. Plate	Approved	24.09.2009	Hellwig
3	Modify drawing	24.09.2009	Dean			
2	Update	02.07.2009	Dean			
1	Zeichnungs Angleichung	17.04.2007	N.Schulz			

ASSMANN WSW components

Customer-No.

ASSMANN WSW-No. AGAL xx/GP-N AGAL xx/GP/ME

Drawing-No. ASS 1077 CO rev05

Replace

Sheet 5/5

Downloaded from Arrow.com.