Alle Rechte vorbehalten/ *All rights reserved*

Harnessing dimensions for cables RG174U BU, RG188AU, RG316U

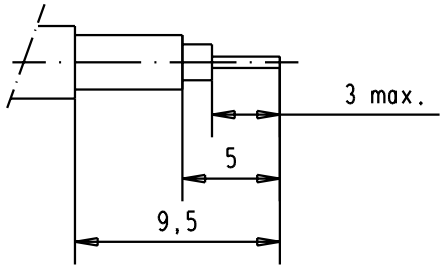

Scale 3:1

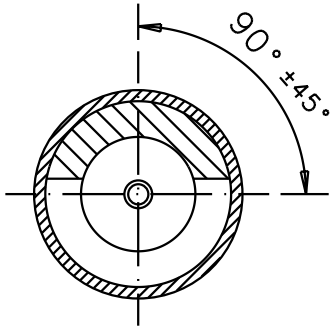

A - A
Solder pot position

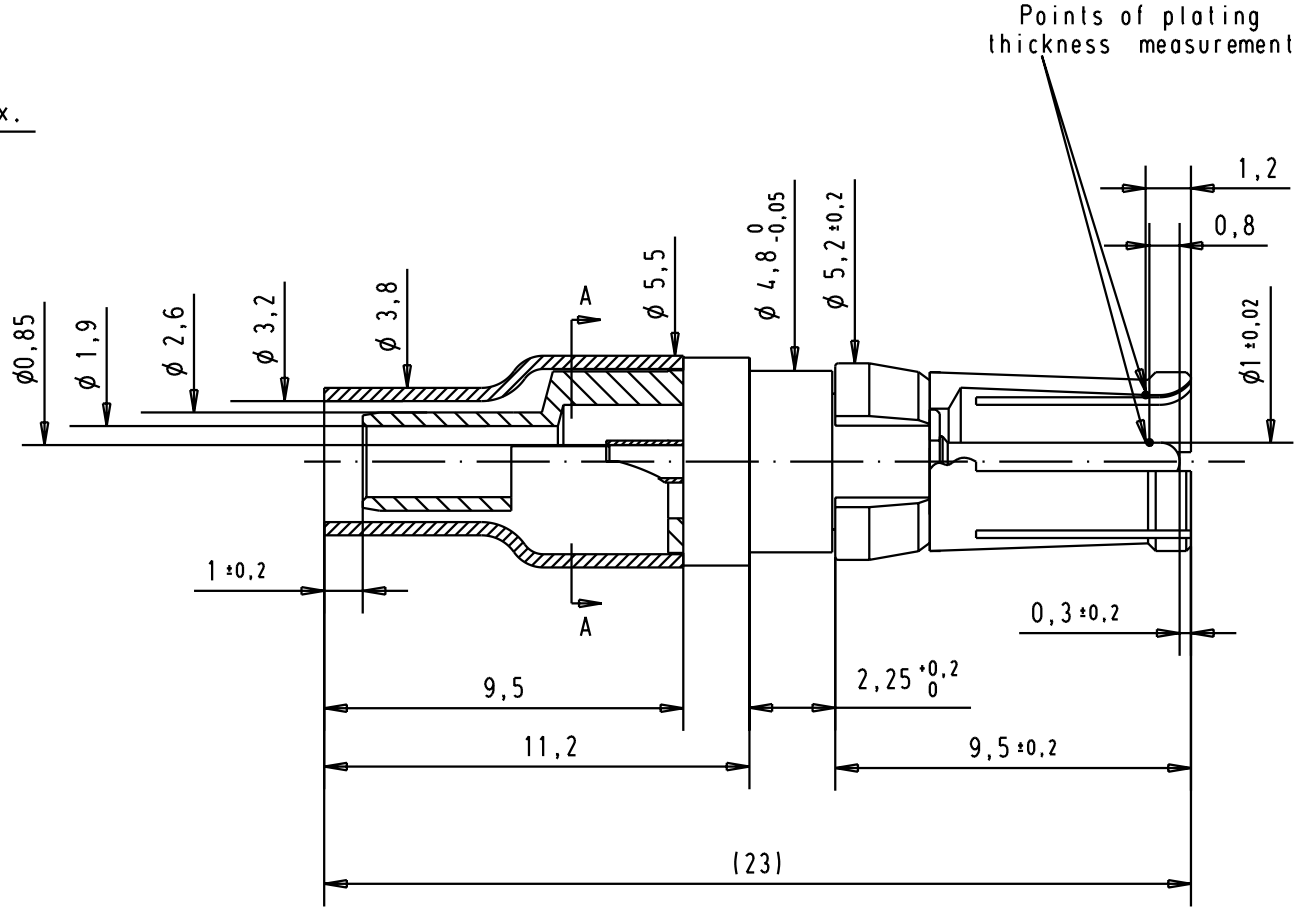

Crimping tool of outer conductor:
hand tool: 09 99 000 0503 00
die: 09 99 000 0508 00

Part number	Plating	outer conductor	inner conductor	Mod.	Dat.	Name
09691817140	Mating area	0,2 µm Au	0,2 µm Au			
	Termination area	5 µm Sn	0,2 µm Au			
09691815140	Mating area	0,8 µm Au	1,3 µm Au			
	Termination area	0,2 µm Au	1,3 µm Au	31057	21-JUN-02	CV

	Dat.	Name
Detail.	21-JUN-02	CV
Insp.		
Stand.		

All Dim. in mm
Orig. Size DIN A 4

HARTING EURL
F-95972 Paris

Female coaxial contact, 50 Ohms straight cable terminaison
inner conductor for solder termination, outer conductor for solder or crimp termination

Maßstab/ *Scale* 5:1

TB 09 69 181 x140

Sub.

Blatt/ *Page* 1/1

Downloaded from Arrow.com.