© 2021 TE Connectivity. All Rights Reserved.

REVISIONS					
P	LTR	DESCRIPTION	DATE	DWN	APVD
	B	REVISED PER PCN-23-192205	05FEB2024	RK	CB
	B1	REVISED PER PCN-24-210159	21MAY2024	PS	CB
	B2	REVISED PER PCN-24-220401	16AUG2024	GB	CB
	B3	REVISED PER PCN-25-254987	08SEP2025	AP	AJ

FIGURE 1

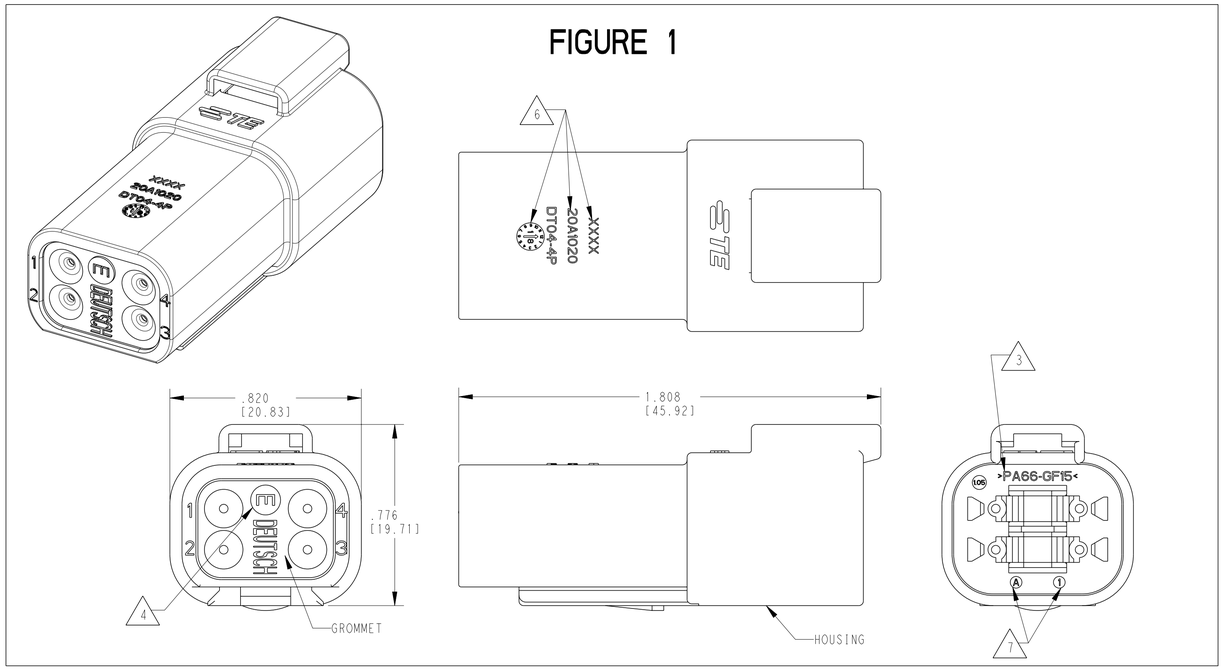

FIGURE 2 SHORT CAP

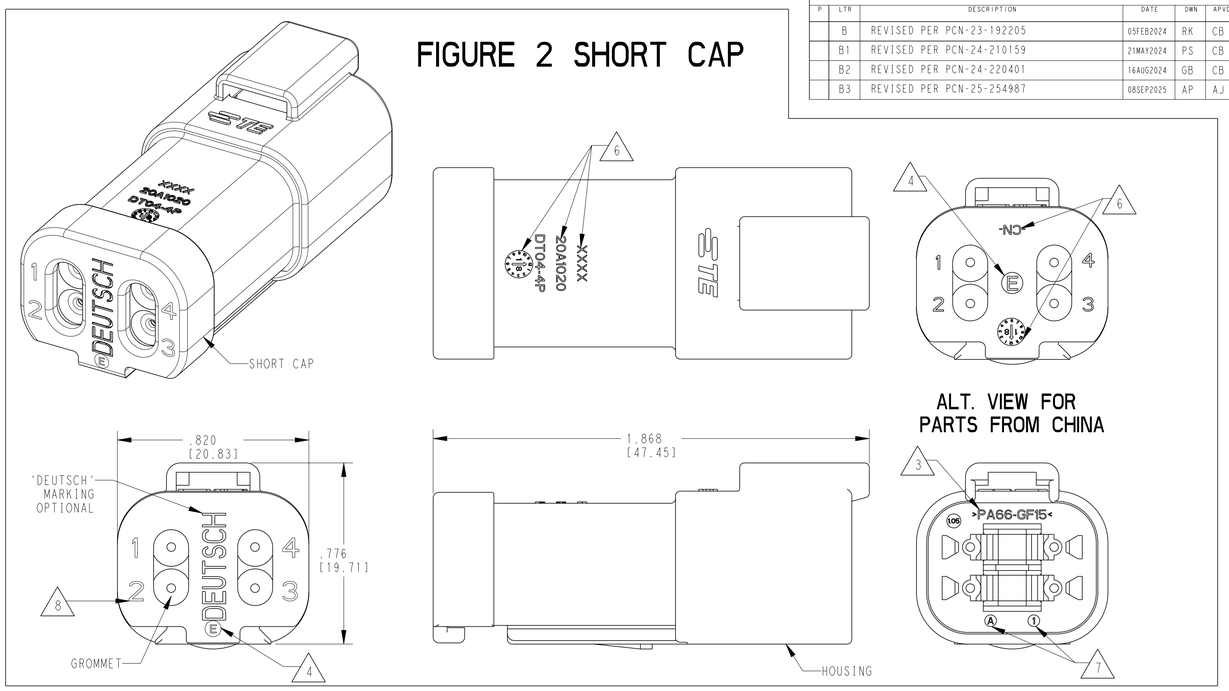

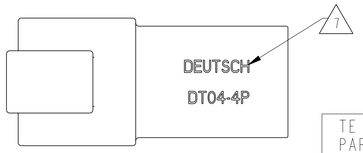

SCALE 2:1

ALT. VIEW FOR
PARTS FROM US

FIGURE 3
LONG CAP

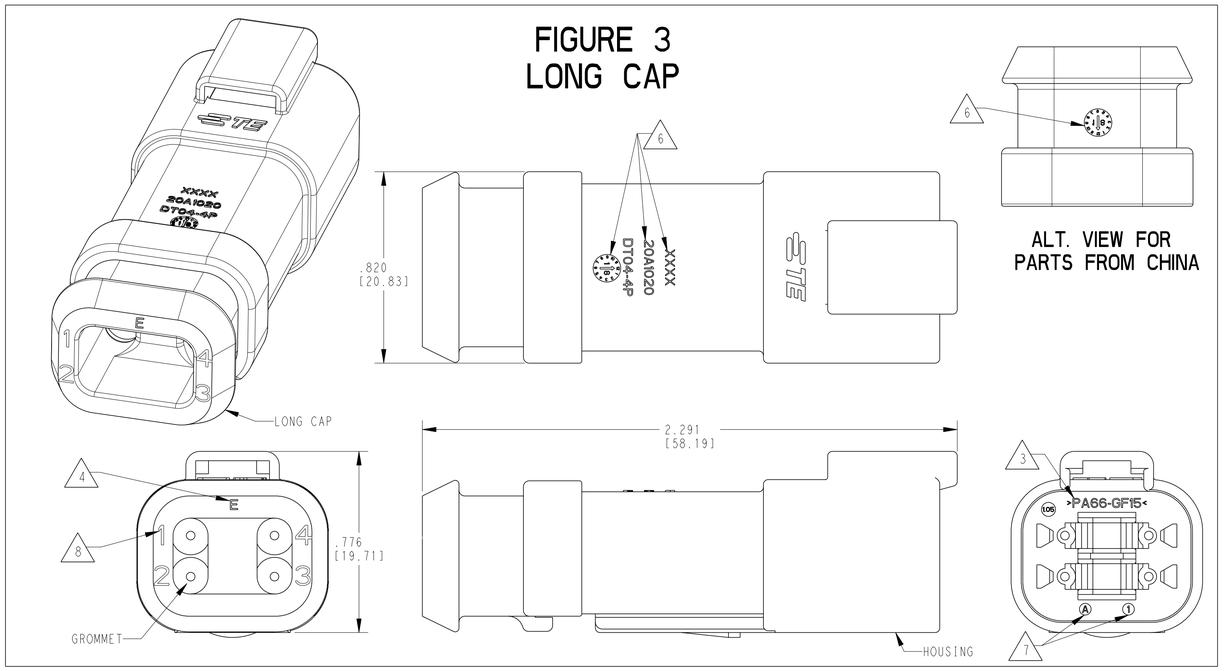

ALT. VIEW FOR
PARTS FROM CHINA

CONTACT SIZE	WIRE RANGE	INSULATION OD SEALING RANGE	SEAL IDENTIFICATION
16	14-20 AWG [2.5-0.5mm^2]	.088-.145 [2.23-3.68]	STANDARD SEAL
		.053-.120 [1.35-3.05]	EXTRA THIN SEAL E-SEAL

TE INTERNAL PART NUMBER	DEUTSCH PART NUMBER	PN REV	HOUSING COLOR	STANDARD SEAL	EXTRA THIN SEAL E-SEAL	BLOCKED SEAL	SHORT CAP	LONG CAP	FIGURE
DT04-4P	DT04-4P	A	GRAY	X					1
DT04-4P-C015	DT04-C015	B	GRAY		X				1
DT04-4P-C017	DT04-4P-C017	C	GRAY			X	X		2
DT04-4P-CE01	DT04-4P-CE01	C	GRAY		X		X		2
DT04-4P-CE02	DT04-4P-CE02	B	BLACK		X				1
DT04-4P-CE03	DT04-4P-CE03	B	BLACK		X		X		2
DT04-4P-CE04	DT04-4P-CE04	C	GRAY		X			X	3
DT04-4P-CE09	DT04-4P-CE09	B	BLACK		X			X	3
DT04-4P-CE26	DT04-4P-CE26	A	BLACK			X	X		2
DT04-4P-E003	DT04-4P-E003	B	GRAY	X			X		2
DT04-4P-E004	DT04-4P-E004	A	BLACK	X					1
DT04-4P-E005	DT04-4P-E005	A	BLACK	X			X		2
DT04-4P-E008	DT04-4P-E008	C	GRAY	X				X	3
DT04-4P-EE01	DT04-4P-EE01	A	BLACK	X				X	3
DT04-4P-EP04	DT04-4P-EP04	C	GRAY	X			X		2
DT04-4P-P004	DT04-4P-P004	B	GRAY	X					1
1-2448112-1	DT04-4P-TE09	A	BROWN		X				1
1-2448112-2	DT04-4P-TE03	A	GREEN		X				1
1-2448112-3	DT04-4P-TE07	A	BLUE		X				1
2-2448112-1	DT04-4P-TN09	A	BROWN	X					1
2-2448112-2	DT04-4P-TN03	A	GREEN	X					1
2-2448112-3	DT04-4P-TN07	A	BLUE	X					1
3-2448112-1	DT04-4P-EE18	A	BROWN		X		X		2
3-2448112-2	DT04-4P-EE16	A	GREEN		X		X		2
3-2448112-3	DT04-4P-EE17	A	BLUE		X		X		2
4-2448112-1	DT04-4P-EE14	A	BROWN	X			X		2
4-2448112-2	DT04-4P-EE13	A	GREEN	X			X		2
4-2448112-3	DT04-4P-EE06	A	BLUE	X			X		2

4. "E" IDENTIFIES E-SEAL, LOCATED APPROX. AS SHOWN.

3. MATERIAL: HOUSING: PA66 GF15, SEE TABLE FOR COLOR
SHORT, LONG CAP: PA66 GF15, BLACK
GROMMET: E-SEAL VMQ (BURNT RED)
N-SEAL VMQ (RED-ORANGE)
BLOCKED VMQ (RED-ORANGE)

2. THIS RECEPTACLE MATES WITH DT06-4S-XXXX PLUG (XXXX = ALL MODIFICATIONS)

1. SECONDARY WEDGE LOCK SOLD SEPARATELY: W4PX-XXXX. (X = A,B,C,D KEY, XXXX = ALL MODIFICATIONS)

NOTES: UNLESS OTHERWISE SPECIFIED

6. MARKING FOR PARTS PRODUCED IN CHINA:

-XXXX IDENTIFIES THE MODIFICATION NUMBER, IF APPLICABLE. EXAMPLE:"E003" FOR DT04-4P-E003, OR BLANK FOR DT04-4P

-DATE CODE: IDENTIFIES THE YEAR, MONTH, DAY AND HOUR OF ASSEMBLY.
YEAR: FIRST AND SECOND DIGIT. (17 = 2017)
MONTH: THIRD DIGIT, EXCLUDING I. A = JAN, B = FEB, C = MARCH ... (K = OCTOBER)
DAY: FOURTH AND FIFTH DIGITS (14 = 14th DAY)
HOUR: SIXTH AND SEVENTH DIGITS (11 = 11AM)

-DIAL DATE CODE LOCATED ON HOUSING AND/OR CAP.
-CN LOCATED ON HOUSING AND/OR CAP.

9. FOR ALL ID MARKINGS SURROUNDING THE PART, ORIENTATION IS SHOWN FOR REFERENCE ONLY AND DOES NOT AFFECT FUNCTIONALITY PROVIDED THE MARKINGS ARE IN THE CORRECT POSITION. SIZE AND LOCATION ARE APPROXIMATE, AS SHOWN.

5. FOR CONTACT AND WIRE PERFORMANCE AND APPLICATION CHARACTERISTICS SEE CUSTOMER DRAWING 0425-015-0000.

8. BLOCKED SEAL CONNECTORS (EXAMPLE: C017) WILL NOT HAVE THE TERMINAL CAVITY IDENTIFICATION MARKINGS ON THEIR CAPS.

7. MARKING FOR PARTS PRODUCED IN US:
-DATE CODE:
YEAR TO BE LAST NUMERICAL DIGIT, EX: 1 = 2021
MONTH USES SEQUENTIAL ALPHA CHARACTERS, EX: A = JANUARY
-DEUTSCH

THIS DRAWING IS A CONTROLLED DOCUMENT.

DIMENSIONS: IN [mm]

TOLERANCES UNLESS OTHERWISE SPECIFIED:
0 PLC ±
1 PLC ±
2 PLC ±
3 PLC ±.025 [0.64]
4 PLC ±
ANGLES ±0°30'0"

MATERIAL 3

FINISH

DWN A. POLO 14DEC2021
CHK R. MESSENGER 14DEC2021
APVD I. GRANTCHAROVA 14DEC2021
PRODUCT SPEC 108-151009
APPLICATION SPEC 114-151009
WEIGHT

TE Connectivity

NAME 4 WAY RECEPTACLE, STANDARD SEAL EXTRA THIN SEAL, SHORT AND LONG CAP, DT SERIES

SIZE A | CAGE CODE 4AFU8 | DRAWING NO C-DT04-4P-XXXX | RESTRICTED TO -

CUSTOMER DRAWING | SCALE 3:1 | SHEET 1 OF 1 | REV B3

4805 (3/13)

Downloaded from Arrow.com.