© 2022 TE Connectivity. All Rights Reserved.

REVISIONS					
P	LTR	DESCRIPTION	DATE	DWN	APVD
	A	INITIAL REVISION	08FEB2022	KR	RM

SECTION A-A

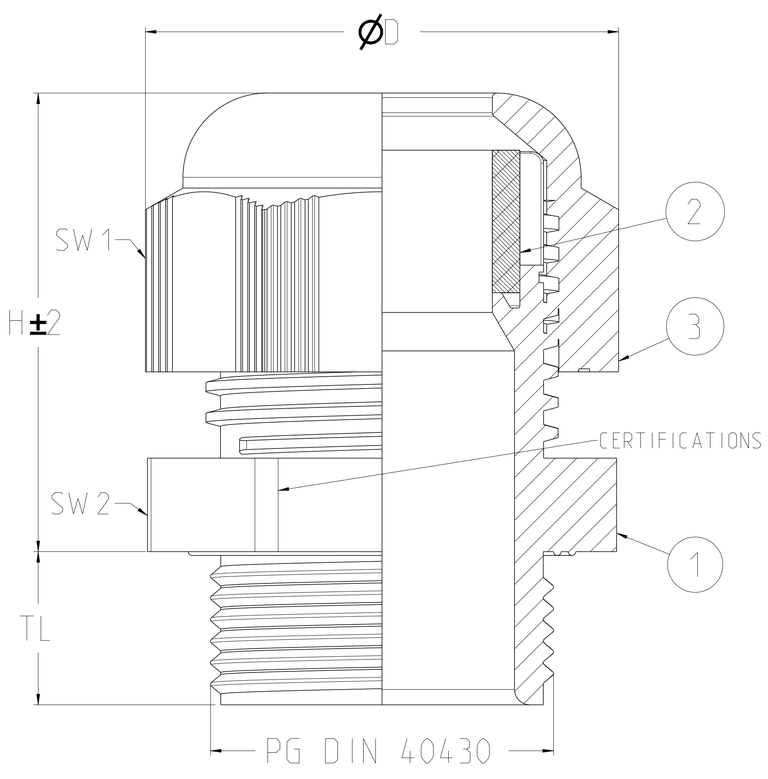

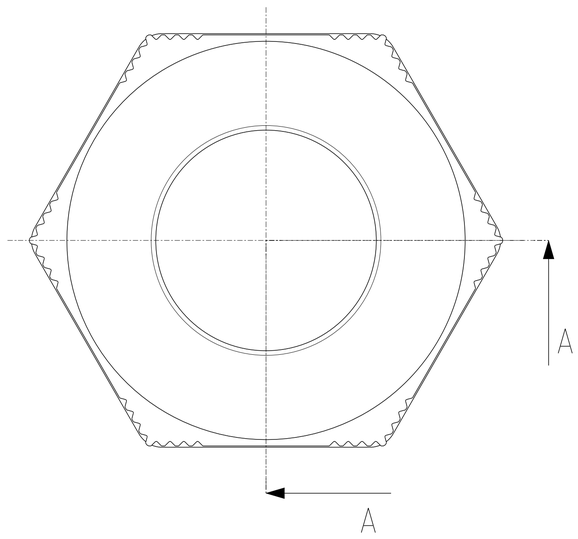

TCPN	TE Product Type (Entrelec)	RAL NUMBER	COLOR	UL RATING	CERTIFICATIONS			PG DIN 40430	TL	H	ØD	SW1	SW2	Clamping Range Ø min - max
1SNG601181R0000	EP-SG-PG7-LGR-A	7035	L.Grey	TYPE 4X	cURus	-	cCSAus	PG 7	8.0	23.3	17.0	15	15	2.0 - 5.0
1SNG601182R0000	EP-SG-PG7-GR-A	7001	Grey	TYPE 4X	cURus	-	cCSAus	PG 7	8.0	23.3	17.0	15	15	2.0 - 5.0
1SNG601183R0000	EP-SG-PG7-BL-A	9005	Black	TYPE 4X	cURus	-	cCSAus	PG 7	8.0	23.3	17.0	15	15	2.0 - 5.0
1SNG601184R0000	EP-SG-PG7-LGR-B	7035	L.Grey	TYPE 4X	cURus	-	cCSAus	PG 7	8.0	23.3	17.0	15	15	3.0 - 6.5
1SNG601185R0000	EP-SG-PG7-GR-B	7001	Grey	TYPE 4X	cURus	-	cCSAus	PG 7	8.0	23.3	17.0	15	15	3.0 - 6.5
1SNG601186R0000	EP-SG-PG7-BL-B	9005	Black	TYPE 4X	cURus	-	cCSAus	PG 7	8.0	23.3	17.0	15	15	3.0 - 6.5
1SNG601187R0000	EP-SG-PG9-LGR-A	7035	L.Grey	TYPE 4X	cURus	-	cCSAus	PG 9	8.0	25.4	21.7	19	19	2.0 - 6.0
1SNG601188R0000	EP-SG-PG9-GR-A	7001	Grey	TYPE 4X	cURus	-	cCSAus	PG 9	8.0	25.4	21.7	19	19	2.0 - 6.0
1SNG601189R0000	EP-SG-PG9-BL-A	9005	Black	TYPE 4X	cURus	-	cCSAus	PG 9	8.0	25.4	21.7	19	19	2.0 - 6.0
1SNG601190R0000	EP-SG-PG9-LGR-B	7035	L.Grey	TYPE 4X	cURus	-	cCSAus	PG 9	8.0	25.4	21.7	19	19	4.0 - 8.0
1SNG601191R0000	EP-SG-PG9-GR-B	7001	Grey	TYPE 4X	cURus	-	cCSAus	PG 9	8.0	25.4	21.7	19	19	4.0 - 8.0
1SNG601192R0000	EP-SG-PG9-BL-B	9005	Black	TYPE 4X	cURus	-	cCSAus	PG 9	8.0	25.4	21.7	19	19	4.0 - 8.0
1SNG601193R0000	EP-SG-PG11-LGR-A	7035	L.Grey	TYPE 4X	cURus	-	cCSAus	PG 11	8.0	30.2	25.0	22	22	3.0 - 7.0
1SNG601194R0000	EP-SG-PG11-GR-A	7001	Grey	TYPE 4X	cURus	-	cCSAus	PG 11	8.0	30.2	25.0	22	22	3.0 - 7.0
1SNG601195R0000	EP-SG-PG11-BL-A	9005	Black	TYPE 4X	cURus	-	cCSAus	PG 11	8.0	30.2	25.0	22	22	3.0 - 7.0
1SNG601196R0000	EP-SG-PG11-LGR-B	7035	L.Grey	TYPE 4X	cURus	-	cCSAus	PG 11	8.0	30.2	25.0	22	22	5.0 -10.0
1SNG601197R0000	EP-SG-PG11-GR-B	7001	Grey	TYPE 4X	cURus	-	cCSAus	PG 11	8.0	30.2	25.0	22	22	5.0 -10.0
1SNG601198R0000	EP-SG-PG11-BL-B	9005	Black	TYPE 4X	cURus	-	cCSAus	PG 11	8.0	30.2	25.0	22	22	5.0 -10.0
1SNG601199R0000	EP-SG-PG135-LGR-A	7035	L.Grey	TYPE 4X	cURus	-	cCSAus	PG 13.5	10.0	30.4	27.0	24	24	5.0 -9.0
1SNG601200R0000	EP-SG-PG135-GR-A	7001	Grey	TYPE 4X	cURus	-	cCSAus	PG 13.5	10.0	30.4	27.0	24	24	5.0 -9.0
1SNG601201R0000	EP-SG-PG135-BL-A	9005	Black	TYPE 4X	cURus	-	cCSAus	PG 13.5	10.0	30.4	27.0	24	24	5.0 -9.0
1SNG601202R0000	EP-SG-PG135-LGR-B	7035	L.Grey	TYPE 4X	cURus	-	cCSAus	PG 13.5	10.0	30.4	27.0	24	24	6.0 - 12.0
1SNG601203R0000	EP-SG-PG135-GR-B	7001	Grey	TYPE 4X	cURus	-	cCSAus	PG 13.5	10.0	30.4	27.0	24	24	6.0 - 12.0
1SNG601204R0000	EP-SG-PG135-BL-B	9005	Black	TYPE 4X	cURus	-	cCSAus	PG 13.5	10.0	30.4	27.0	24	24	6.0 - 12.0
1SNG601205R0000	EP-SG-PG16-LGR-A	7035	L.Grey	TYPE 4X	cURus	-	cCSAus	PG 16	10.0	29.9	30.9	27	27	7.0 - 12.0
1SNG601206R0000	EP-SG-PG16-GR-A	7001	Grey	TYPE 4X	cURus	-	cCSAus	PG 16	10.0	29.9	30.9	27	27	7.0 - 12.0
1SNG601207R0000	EP-SG-PG16-BL-A	9005	Black	TYPE 4X	cURus	-	cCSAus	PG 16	10.0	29.9	30.9	27	27	7.0 - 12.0
1SNG601208R0000	EP-SG-PG16-LGR-B	7035	L.Grey	TYPE 4X	cURus	-	cCSAus	PG 16	10.0	29.9	30.9	27	27	10.0 - 14.0
1SNG601209R0000	EP-SG-PG16-GR-B	7001	Grey	TYPE 4X	cURus	-	cCSAus	PG 16	10.0	29.9	30.9	27	27	10.0 - 14.0
1SNG601210R0000	EP-SG-PG16-BL-B	9005	Black	TYPE 4X	cURus	-	cCSAus	PG 16	10.0	29.9	30.9	27	27	10.0 - 14.0
1SNG601211R0000	EP-SG-PG21-LGR-A	7035	L.Grey	TYPE 4X	cURus	-	cCSAus	PG 21	11.0	36.4	37.2	33	33	9.0 - 16.0
1SNG601212R0000	EP-SG-PG21-GR-A	7001	Grey	TYPE 4X	cURus	-	cCSAus	PG 21	11.0	36.4	37.2	33	33	9.0 - 16.0
1SNG601213R0000	EP-SG-PG21-BL-A	9005	Black	TYPE 4X	cURus	-	cCSAus	PG 21	11.0	36.4	37.2	33	33	9.0 - 16.0
1SNG601214R0000	EP-SG-PG21-LGR-B	7035	L.Grey	TYPE 4X	cURus	-	cCSAus	PG 21	11.0	36.4	37.2	33	33	13.0 - 18.0
1SNG601215R0000	EP-SG-PG21-GR-B	7001	Grey	TYPE 4X	cURus	-	cCSAus	PG 21	11.0	36.4	37.2	33	33	13.0 - 18.0
1SNG601216R0000	EP-SG-PG21-BL-B	9005	Black	TYPE 4X	cURus	-	cCSAus	PG 21	11.0	36.4	37.2	33	33	13.0 - 18.0

RPT	QTY	DOC TITLE	DRAWING NUMBER	MATERIAL	COMMENTS
3	1	CAP	-	PA6 V2 (F1 Listed)	-
2	1	SEAL	-	CR	-
1	1	BODY	-	PA6 V2 (F1 Listed)	-

THIS DRAWING IS A CONTROLLED DOCUMENT.

DWN Rajan n. Kasi 08FEB2022
CHK Rafeeq, Mohd 09FEB2022
APVD Rafeeq, Mohd 09FEB2022

DIMENSIONS: mm

TOLERANCES UNLESS OTHERWISE SPECIFIED:
0 PLC ±-
1 PLC ±1
2 PLC ±1
3 PLC ±1
4 PLC ±1
ANGLES ±-

MATERIAL REF.TABLE -
FINISH - -

TE Connectivity

NAME – PG-STD-GLAND-PA –
PRODUCT SPEC PG-STD-GLAND-PA
APPLICATION SPEC –
WEIGHT –

SIZE	CAGE CODE	DRAWING NO	RESTRICTED TO
A1	00779	C-1SNP061307-0100	-

CUSTOMER DRAWING | SCALE 5:1 | SHEET 1 OF 2 | REV A1

Downloaded from Arrow.com.

© 2022 TE Connectivity. All Rights Reserved.

REVISIONS					
P	LTR	DESCRIPTION	DATE	DWN	APVD
	A	INITIAL REVISION	08FEB2022	KR	RM

TCPN	TE Product Type (Entrelec)	RAL NUMBER	COLOR	UL RATING	CERTIFICATIONS			PG DIN 40430	TL	H	ØD	SW1	SW2	Clamping Range Ø min - max
1SNG601217R0000	EP-SG-PG29-LGR-A	7035	L.Grey	TYPE 4X	cURus	-	cCSAus	PG 29	11.0	41.3	47.1	42	42	12.0 - 20.0
1SNG601218R0000	EP-SG-PG29-GR-A	7001	Grey	TYPE 4X	cURus	-	cCSAus	PG 29	11.0	41.3	47.1	42	42	12.0 - 20.0
1SNG601219R0000	EP-SG-PG29-BL-A	9005	Black	TYPE 4X	cURus	-	cCSAus	PG 29	11.0	41.3	47.1	42	42	12.0 - 20.0
1SNG601220R0000	EP-SG-PG29-LGR-B	7035	L.Grey	TYPE 4X	cURus	-	cCSAus	PG 29	11.0	41.3	47.1	42	42	18.0 - 25.0
1SNG601221R0000	EP-SG-PG29-GR-B	7001	Grey	TYPE 4X	cURus	-	cCSAus	PG 29	11.0	41.3	47.1	42	42	18.0 - 25.0
1SNG601222R0000	EP-SG-PG29-BL-B	9005	Black	TYPE 4X	cURus	-	cCSAus	PG 29	11.0	41.3	47.1	42	42	18.0 - 25.0
1SNG601223R0000	EP-SG-PG36-LGR-A	7035	L.Grey	TYPE 4X	cURus	-	cCSAus	PG 36	13.0	50.4	52.4	53	53	20.0 - 26.0
1SNG601224R0000	EP-SG-PG36-GR-A	7001	Grey	TYPE 4X	cURus	-	cCSAus	PG 36	13.0	50.4	52.4	53	53	20.0 - 26.0
1SNG601225R0000	EP-SG-PG36-BL-A	9005	Black	TYPE 4X	cURus	-	cCSAus	PG 36	13.0	50.4	52.4	53	53	20.0 - 26.0
1SNG601226R0000	EP-SG-PG36-LGR-B	7035	L.Grey	TYPE 4X	cURus	-	cCSAus	PG 36	13.0	50.4	52.4	53	53	22.0 - 32.0
1SNG601227R0000	EP-SG-PG36-GR-B	7001	Grey	TYPE 4X	cURus	-	cCSAus	PG 36	13.0	50.4	52.4	53	53	22.0 - 32.0
1SNG601228R0000	EP-SG-PG36-BL-B	9005	Black	TYPE 4X	cURus	-	cCSAus	PG 36	13.0	50.4	52.4	53	53	22.0 - 32.0
1SNG601229R0000	EP-SG-PG42-LGR-A	7035	L.Grey	TYPE 4X	cURus	-	cCSAus	PG 42	13.0	52.8	54.8	60	60	25.0 - 31.0
1SNG601230R0000	EP-SG-PG42-GR-A	7001	Grey	TYPE 4X	cURus	-	cCSAus	PG 42	13.0	52.8	54.8	60	60	25.0 - 31.0
1SNG601231R0000	EP-SG-PG42-BL-A	9005	Black	TYPE 4X	cURus	-	cCSAus	PG 42	13.0	52.8	54.8	60	60	25.0 - 31.0
1SNG601232R0000	EP-SG-PG42-LGR-B	7035	L.Grey	TYPE 4X	cURus	-	cCSAus	PG 42	13.0	52.8	54.8	60	60	30.0 - 38.0
1SNG601233R0000	EP-SG-PG42-GR-B	7001	Grey	TYPE 4X	cURus	-	cCSAus	PG 42	13.0	52.8	54.8	60	60	30.0 - 38.0
1SNG601234R0000	EP-SG-PG42-BL-B	9005	Black	TYPE 4X	cURus	-	cCSAus	PG 42	13.0	52.8	54.8	60	60	30.0 - 38.0
1SNG601235R0000	EP-SG-PG48-LGR-A	7035	L.Grey	TYPE 4X	cURus	-	cCSAus	PG 48	14.0	52.9	72.4	65	65	29.0 - 35.0
1SNG601236R0000	EP-SG-PG48-GR-A	7001	Grey	TYPE 4X	cURus	-	cCSAus	PG 48	14.0	52.9	72.4	65	65	29.0 - 35.0
1SNG601237R0000	EP-SG-PG48-BL-A	9005	Black	TYPE 4X	cURus	-	cCSAus	PG 48	14.0	52.9	72.4	65	65	29.0 - 35.0
1SNG601238R0000	EP-SG-PG48-LGR-B	7035	L.Grey	TYPE 4X	cURus	-	cCSAus	PG 48	14.0	52.9	72.4	65	65	34.0 - 44.0
1SNG601239R0000	EP-SG-PG48-GR-B	7001	Grey	TYPE 4X	cURus	-	cCSAus	PG 48	14.0	52.9	72.4	65	65	34.0 - 44.0
1SNG601240R0000	EP-SG-PG48-BL-B	9005	Black	TYPE 4X	cURus	-	cCSAus	PG 48	14.0	52.9	72.4	65	65	34.0 - 44.0

RPT	QTY	DOC TITLE	DRAWING NUMBER	MATERIAL	COMMENTS
3	1	CAP	-	PA6 V2 (F1 Listed)	-
2	1	SEAL	-	CR	-
1	1	BODY	-	PA6 V2 (F1 Listed)	-

THIS DRAWING IS A CONTROLLED DOCUMENT.

DIMENSIONS: mm

TOLERANCES UNLESS OTHERWISE SPECIFIED:
0 PLC ±
1 PLC ±1
2 PLC ±1
3 PLC ±1
4 PLC ±1
ANGLES ±

MATERIAL: REF.TABLE -
FINISH: - -
WEIGHT: -

DWN 08FEB2022 Rajan n, Kasi
CHK 09FEB2022 Rafeeq, Mohd
APVD 09FEB2022 Rafeeq, Mohd
PRODUCT SPEC: PG-STD-GLAND-PA
APPLICATION SPEC: - -

TE Connectivity

NAME: - PG-STD-GLAND-PA -

SIZE	CAGE CODE	DRAWING NO	RESTRICTED TO
A1	00779	C-1SNP061307-0100	-

CUSTOMER DRAWING | SCALE 5:1 | SHEET 2 OF 2 | REV A1

Downloaded from Arrow.com.