TRACO POWER

AC/DC Medical Power Supply

TPP 100 Series, 100 Watt

- **Encased 100 W power supply with screw connection in 2.44” x 3.6” package**
- **Certification according to IEC/EN/ES 60601-1 edition 3.2 for 2 x MOPP**
- **Low leakage current <75 µA rated for BF applications**
- **Risk management process according to ISO 14971 incl. risk management file**
- **Acceptance criteria for electronic assemblies acc. to IPC-A-610 Level 3**
- **Active power factor correction >0.95**
- **Protection class I and II prepared**
- **Operating up to 5000 m altitude**
- **Ready to meet ErP directive, <0.3 W no load power consumption**
- **5-year product warranty**

2MOPP prepared ErP ready c UL us CB Scheme

ES 60601-1 IEC 60601-1
UL 62368-1 IEC 62368-1

The TPP 100 Series of 100 Watt AC/DC encased power supplies feature a reinforced double I/O isolation system according to latest medical safety standards (60601-1 edition 3.2, 2 x MOPP). The earth leakage current is below 75 µA which makes the units suitable for BF (body floating) applications. The excellent efficiency of up to 92% allows a high power density for the standard 2.44” x 3.6” packaging format. The full load operating temperature range is −25°C to +60°C while it goes up to 80°C with 50% load derating. The EMC characteristic is dedicated for applications in industrial and medical fields. High reliability is provided by the use of industrial quality grade components and an excellent thermal management. It makes the products an ideal solution for medical devices and for demanding safety and space critical applications.

Models

Order Code	Output Power max.	Output Voltage nom. (adjustable)	Output Current max.	Efficiency typ.
TPP 100-112	100 W	12 VDC (10.8 - 13.2 VDC)	8'340 mA	91 %
TPP 100-115		15 VDC (13.5 - 16.5 VDC)	6'670 mA	92 %
TPP 100-124		24 VDC (21.6 - 26.4 VDC)	4'170 mA	92 %
TPP 100-128		28 VDC (25.2 - 30.8 VDC)	3'580 mA	92 %
TPP 100-136		36 VDC (32.4 - 39.6 VDC)	2'780 mA	91 %
TPP 100-148		48 VDC (43.2 - 52.8 VDC)	2'090 mA	91 %

Downloaded from Arrow.com.

Input Specifications

Input Voltage	- AC Range	Operational Range:	85 - 264 VAC (Full Range)
		Rated Range:	100 - 240 VAC (Full Range)
	- DC Range	Operational Range:	120 - 370 VDC (Designed for, no certification)
		Polarity:	+DC: L / –DC: N
Input Frequency		Operational Range:	47 - 440 Hz
		Certified:	50/60 Hz
Power Consumption	- No load & Vin = 230 VAC		300 mW max. (Ready to meet ErP directive)
	- No load & Vin = 115 VAC		300 mW max.
Input Current	- Full load & Vin = 230 VAC		550 mA max.
	- Full load & Vin = 115 VAC		1'150 mA max.
Input Inrush Current	- At 230 VAC		60 A max.
	- At 115 VAC		35 A max.
Power Factor	- At 230 VAC		0.95 min. (Active Power Factor Correction)
	- At 115 VAC		0.95 min. (Active Power Factor Correction)
Input Protection			T 3.15 A / 250 VAC (Internal Fuse in L & N)
Recommended Input Fuse			(The need of an external fuse has to be assessed in the final application.)

Output Specifications

Output Voltage Adjustment			±10% (By trim potentiometer) Output power must not exceed rated power!
Voltage Set Accuracy			±1% max.
Regulation	- Input Variation (Vmin - Vmax)		0.2% max.
	- Load Variation (0 - 100%)		0.5% max.
Ripple and Noise (20 MHz Bandwidth)		12 VDC model:	120 mVp-p typ. (w/ 10 µF X7R)
		15 VDC model:	150 mVp-p typ. (w/ 10 µF X7R)
		24 VDC model:	160 mVp-p typ. (w/ 1 µF X7R)
		28 VDC model:	180 mVp-p typ. (w/ 1 µF X7R)
		36 VDC model:	190 mVp-p typ. (w/ 1 µF X7R)
		48 VDC model:	340 mVp-p typ. (w/ 0.1 µF X7R)
Capacitive Load		12 VDC model:	6'950 µF max.
		15 VDC model:	4'450 µF max.
		24 VDC model:	1'750 µF max.
		28 VDC model:	1'280 µF max.
		36 VDC model:	770 µF max.
		48 VDC model:	430 µF max.
Minimum Load			Not required
Temperature Coefficient			±0.02 %/K max.
Hold-up Time	- At 230 VAC		16 ms min.
	- At 115 VAC		16 ms min.
Start-up Time	- At 230 VAC		1'000 ms max.
	- At 115 VAC		1'000 ms max.
Short Circuit Protection			Continuous, Automatic recovery
Output Current Limitation			115 - 150% of Iout max.
Overvoltage Protection			115 - 135% of Vout nom.
Transient Response	- Response Deviation		3% max. (50% to 75% Load Step)
	- Response Time		500 µs typ. (50% to 75% Load Step)

All specifications valid at 230 VAC, resistive full load and +25°C after warm-up time, unless otherwise stated.

Downloaded from Arrow.com.

Safety Specifications

Standards	- IT / Multimedia Equipment	EN 60950-1 EN 62368-1 IEC 60950-1 IEC 62368-1 UL 60950-1 UL 62368-1
	- Medical Equipment	EN 60601-1 IEC 60601-1 ANSI/AAMI ES 60601-1 2 x MOPP (Means Of Patient Protection)
	- Certification Documents	www.tracopower.com/tpp100-safety-cert/
Protection Class		Class I & II (Prepared): Reinforced Insulation
	See application note:	www.tracopower.com/info/protection-class.pdf
Energy Source	- Output, acc. to 62368-1	ES1
Power Source	- Output, acc. to 62368-1	PS3
Pollution Degree		PD 2
Over Voltage Category		OVC II

EMC Specifications

EMI (Emissions)			EN 60601-1-2 edition 4 (Medical Devices)
	- Conducted Emissions		EN 55011 class A (internal filter)
			EN 55011 class B (internal filter)
			EN 55032 class A (internal filter)
			EN 55032 class B (internal filter)
			FCC 47 Part 15 class A (internal filter)
			FCC 47 Part 15 class B (internal filter)
			FCC 47 Part 18 class A (internal filter)
			FCC 47 Part 18 class B (internal filter)
	- Radiated Emissions		EN 55011 class A (internal filter)
			EN 55032 class A (internal filter)
			FCC 47 Part 15 class A (internal filter)
			FCC 47 Part 18 class A (internal filter)
	- Harmonic Current Emissions		EN 61000-3-2, class A
			EN 61000-3-2, class D
	- Voltage Fluctuations & Flicker		EN 61000-3-3
EMS (Immunity)			EN 60601-1-2 edition 4 (Medical Devices)
			EN 55024 (IT Equipment)
			EN 55035 (Multimedia)
	- Electrostatic Discharge	Air:	EN 61000-4-2, ±15 kV, perf. criteria A
		Contact:	EN 61000-4-2, ±8 kV, perf. criteria A
	- RF Electromagnetic Field		EN 61000-4-3, 20 V/m, perf. criteria A
	- EFT (Burst) / Surge		EN 61000-4-4, ±2 kV, perf. criteria A
		L to L:	EN 61000-4-5, ±1 kV, perf. criteria A
	- Conducted RF Disturbances		EN 61000-4-6, 20 Vrms, perf. criteria A
	- PF Magnetic Field	Continuous:	EN 61000-4-8, 10 A/m, perf. criteria A
	- Voltage Dips & Interruptions	230 VAC / 50 Hz:	EN 61000-4-11
			30%, 25 periods, perf. criteria A
			>95%, 0.5 periods, perf. criteria A
			>95%, 250 periods, perf. criteria B
		115 VAC / 60 Hz:	EN 61000-4-11
			30%, 25 periods, perf. criteria A
			>95%, 0.5 periods, perf. criteria A
			>95%, 250 periods, perf. criteria B
EMC / Environmental	- Certification Documents		www.tracopower.com/tpp100-emc-cert/

All specifications valid at 230 VAC, resistive full load and +25°C after warm-up time, unless otherwise stated.

Downloaded from Arrow.com.

General Specifications

Relative Humidity		95% max. (non condensing)
Temperature Ranges	- Operating Temperature	−25°C to +85°C
	- Storage Temperature	−40°C to +85°C
Power Derating	- High Temperature	2.4 %/K above 60°C
	- Low Input Voltage	1.33 %/V below 100 VAC
	See application note:	www.tracopower.com/tpp100-cc/
Cooling System		Natural convection (20 LFM)
Altitude During Operation		5'000 m max.
Regulator Topology		Flyback Converter
Switching Frequency		45 - 75 kHz (PWM QR)
Insulation System		Reinforced Insulation
Working Voltage (rated)		250 VAC
Isolation Test Voltage	- Input to Output, 60 s	5'000 VAC
	- Input to Case or PE, 60 s	1'500 VAC
	- Output to Case or PE, 60 s	1'500 VAC
Isolation Resistance	- Input to Output, 500 VDC	100 MΩ min.
Leakage Current (at 264 VAC)	- Touch Current	75 µA max.
Reliability	- Calculated MTBF	790'000 h (MIL-HDBK-217F, ground benign)
Environment	- Vibration	IEC 60068-2-6 5 g, 3 axis, sine sweep, 5-500 Hz, 1 oct/min
	- Mechanical Shock	IEC 60068-2-27 50 g, 3 axis, half sine, 11 ms
Housing Material		Alu alloy, black anodized coating
Housing Type		Metal Case
Mounting Type		Chassis Mount
Connection Type		Screw Terminal
Weight		210 g
Environmental Compliance	- REACH Declaration	www.tracopower.com/info/reach-declaration.pdf REACH SVHC list compliant REACH Annex XVII compliant
	- RoHS Declaration	www.tracopower.com/info/rohs-declaration.pdf Exemptions: 7(a), 7(c)-I (RoHS exemptions refer to the component concentration only, not to the overall concentration in the product (O5A rule).)
	- SCIP Reference Number	b72f9e67-0bc0-4fc1-870a-83d9007805af

Additional Information

Supporting Documents	www.tracopower.com/overview/tpp100
Frequently Asked Questions	www.tracopower.com/glossary-faq
Glossary	www.tracopower.com/info/glossary.pdf
Service Portal	www.tracoserviceportal.com

All specifications valid at 230 VAC, resistive full load and +25°C after warm-up time, unless otherwise stated.

Downloaded from Arrow.com.

Outline Dimensions

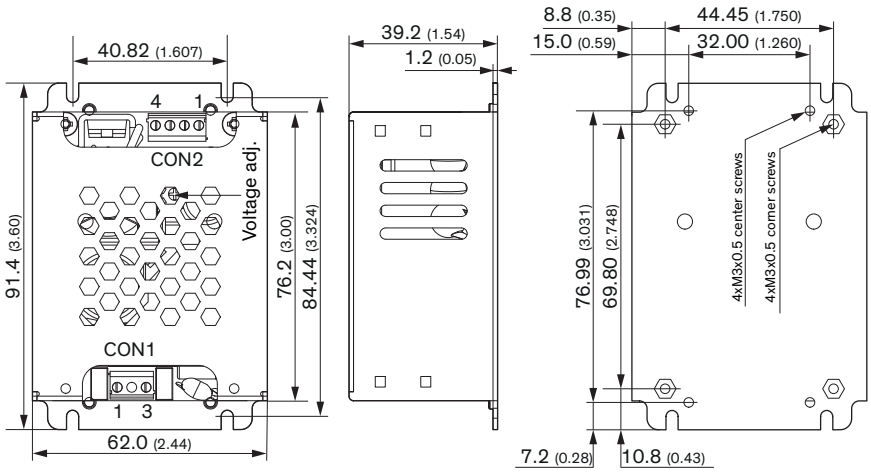

Dimension in mm (inch)
Tolerances: x.x ±0.5 (x.xx ±0.02)
x.xx ±0.25 (x.xxx ±0.010)

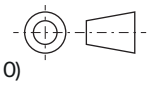

Screw penetration depth:
Corner screws: max. 2.3 (0.09)
Center screws: max. 2.0 (0.08)

Mounting screws tightening torque:
max. 0.49 Nm / 5 kgfcm

Screw Terminal

Input (CON1)		**Output** (CON2)	
Pin	**Function**	**Pin**	**Function**
1	Line	**1,2**	–Vout
3	Neutral	**3,4**	+Vout

CON1: Terminal Block
mates with Screw locked torque MAX 2Kgf.cm/0.2N.m
Wire dimension: AWG 16 max.

CON2: Terminal Block
mates with Screw locked torque MAX 2Kgf.cm/0.2N.m
Wire dimension: AWG 16 max.

Note: The size of the wires has to be assessed in the final application.

© Copyright 2026 Traco Electronic AG

Downloaded from Arrow.com.