DATE
19.09.2019

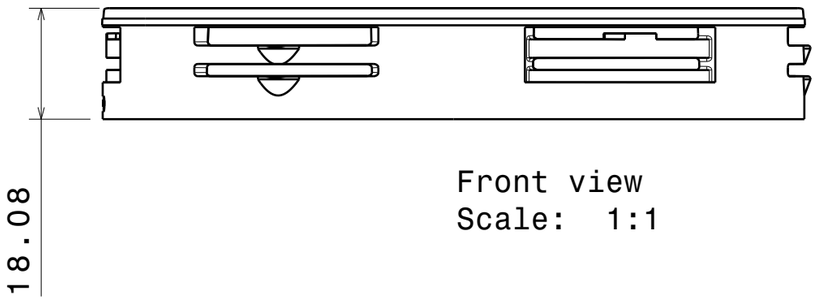

Front view
Scale: 1:1

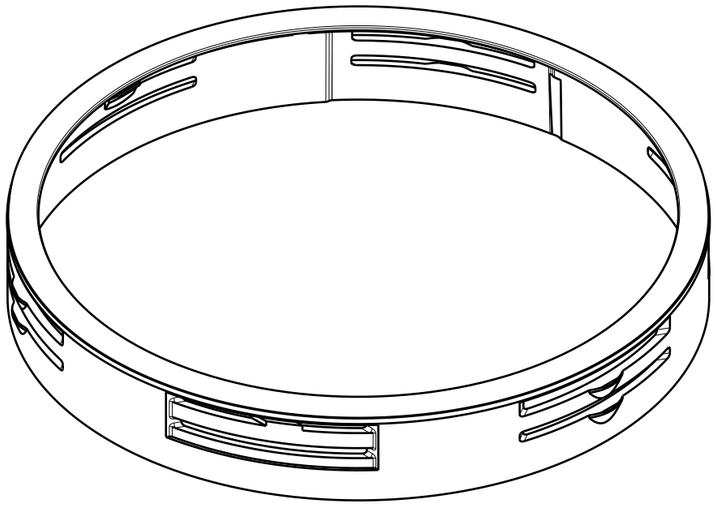

Isometric view
Scale: 1:1

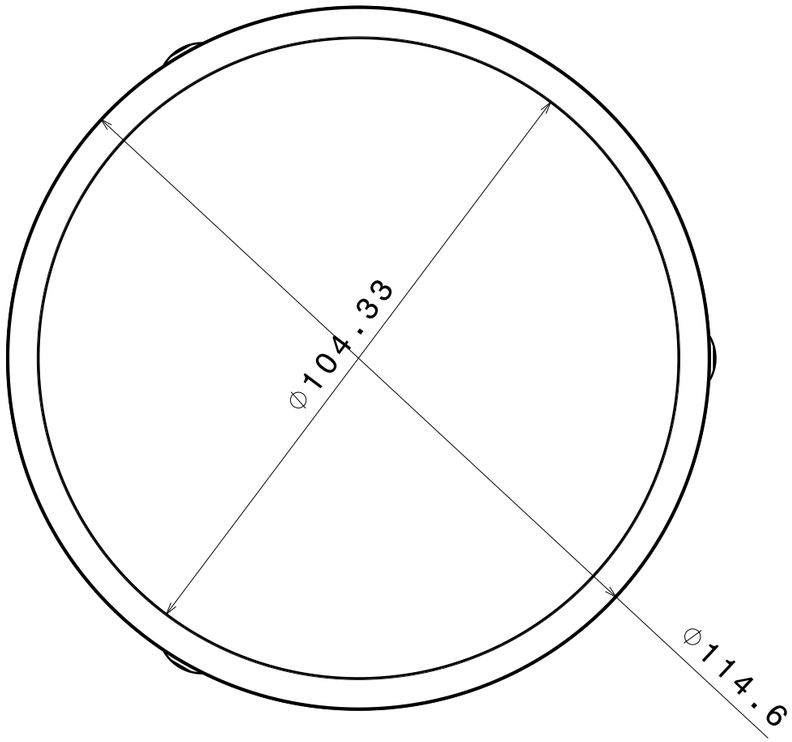

Top view
Scale: 1:1

PART	TYPE	MATERIAL	COLOR / COATING
C17092_ALISE-110-RING		PC	Black

MECHANICAL DRAWING

PRODUCT
ALISE ACCESSORIES

LEDiL®

Plastic moulding general tolerances according to DIN 16901-130 and applies if not otherwise shown in the drawing. Silicone moulding general tolerances according to ISO 3302-1 Class M3 and applies if not otherwise shown in the drawing.

FIRST ANGLE PROJECTION:

This drawing is the property of LEDiL Oy. It may not be copied or otherwise distributed without prior written permission from LEDiL Oy.

SCALE 1:1 | WEIGHT 14 g | A3 | SHEET 1/1

Notes

PCB or heatsink level.
LED location
Ensure LED fitting from a product specific 3D model available from www.ledil.com
For more details about installation please see LEDiL Installation Guide on www.ledil.com

Downloaded from Arrow.com.

DATE
19.09.2019

1. Place ALISE-110-RING(#1) on the flat surface.
2. Drop sublense (#2) inside ring (#1). 3 slots quides rotation. NOTE. Recesses in sublense upwards as shown in Detail B
To fasten sublens can be rotated clock or counter clock wise.
3. Press ALISE Reflector(#3) inside ring (#1). 3 snap features on ring will lock the reflector in place.
4. Press assembled reflector + accessory to luminaire housing. Reference dimensionig for locking features shown in section view A

Steps 1-3

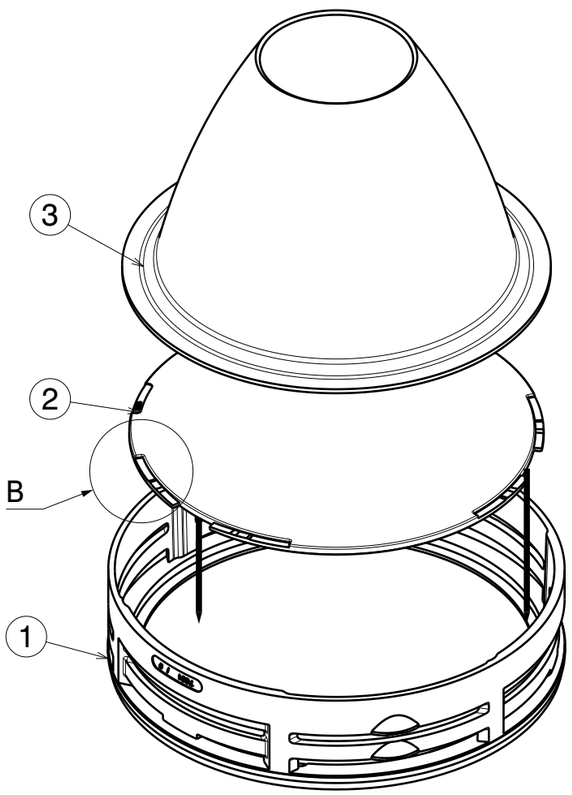

Step 4

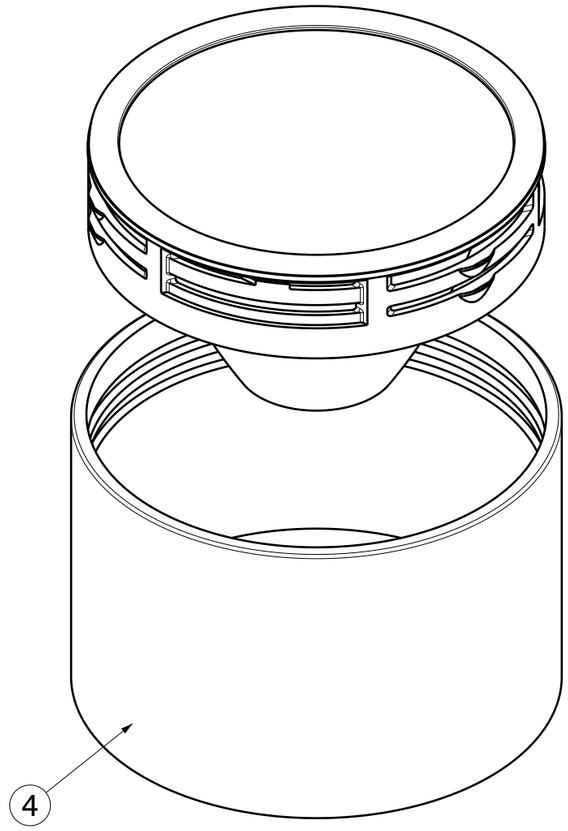

Section View A

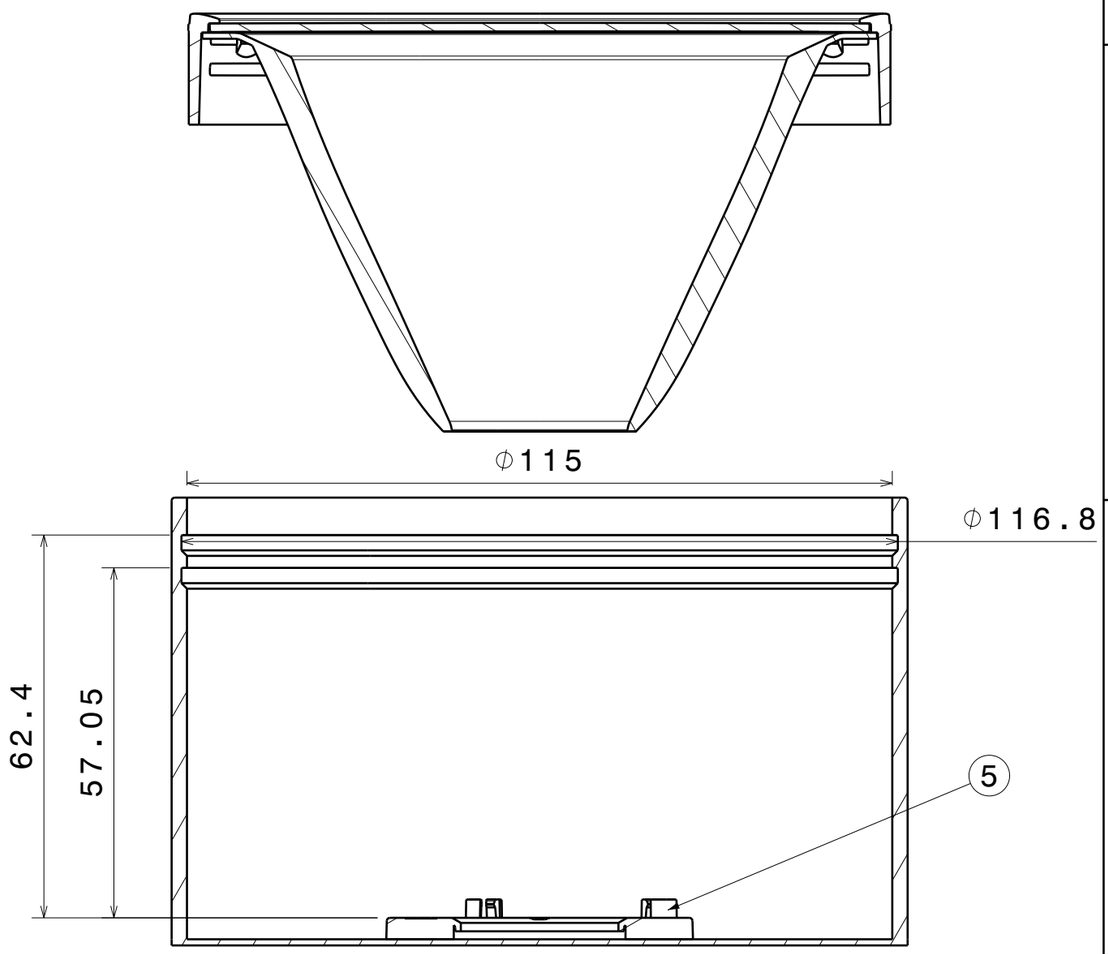

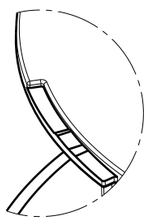

Detail B
Scale: 2:1

PART	#
C17092_ALISE-110-RING	1
C17097_ALISE-110-DL/C17096_ALISE-110-CL	2
C16899_C16900_C16901_C16902_ALISE-110	3
Luminaire housing reference	4
LED connector	5

Notes

PCB or heatsink level.
LED location
Ensure LED fitting from a product specific 3D model available from www.ledil.com
For more details about installation please see LEDiL Installation Guide on www.ledil.com

MECHANICAL DRAWING

PRODUCT
ALISE ACCESSORIES

LEDiL®

Plastic moulding general tolerances according to DIN 16901-130 and applies if not otherwise shown in the drawing. Silicone moulding general tolerances according to ISO 3302-1 Class M3 and applies if not otherwise shown in the drawing.

FIRST ANGLE PROJECTION:

This drawing is the property of LEDiL Oy. It may not be copied or otherwise distributed without prior written permission from LEDiL Oy.

SCALE -

WEIGHT -

A3 SHEET 1/1

Downloaded from Arrow.com.