HIGH SPEED QUAD CHANNEL DIGITAL ISOLATORS

DCL54xx01

**DCL540C01/DCL540D01/DCL541A01/DCL541B01/
DCL540L01/DCL540H01/DCL541L01/DCL541H01/DCL542L01/DCL542H01**

1. Applications

- Industrial automation systems
- Motor control
- Inverter
- Switching power supply

2. Description

DCL540C01/DCL540D01/DCL541A01/DCL541B01/DCL540L01/DCL540H01/DCL541L01/DCL541H01/DCL542L01/DCL542H01 are high-speed quad-channel digital isolators. Outstanding performance characteristics are achieved by Toshiba CMOS technology and the magnetic coupling structure. In addition, they comply with UL 1577 and has a 5000Vrms rating as an withstand isolation voltage. These products can operate with a temperature range of -40 to 110 °C and a wide supply voltage of 2.25 to 5.5 V.

3. Features

Data rate	: Up to 150 Mbps
Supply voltage	: 2.25 V to 5.5 V
Temperature Range	: -40 °C to 110 °C
Propagation Delay	:10.9 ns Typical (5.0 V operation)
Default Output	: High and Low Options
CMTI (Typ.)	: 150 kV/μs
Withstand Isolation Voltage	: 5 kVrms
Package	: 16pin SOIC Wide body
Safety-Related Certification	:

UL : UL1577, File No. E519997

cUL : CSA Component Acceptance Service Notice No. 5A, File No. E519997

VDE : DIN EN IEC 60747-17 (VDE V 0884-17) Certificate No.40055132

CQC : GB 4943.1-2022 Certificate No. CQC22001345018

Start of commercial production
2023-05

©2026
Toshiba Electronic Devices & Storage Corporation

Downloaded from Arrow.com.

Table of Contents

1. Applications 1
2. Description 1
3. Features 1
4. Internal Circuit (Simplified Schematic) 3
5. Pin configuration and Functions 3
5.1. Pin Functions 4
6. Functional Description 5
7. Absolute Maximum Ratings (T_a = 25 °C) 7
8. Recommended Operating Conditions (Note) 7
9. Electrical Characteristics 8
9.1. Electrical Characteristics – 5 V Supply 8
9.2. Electrical Characteristics – 3.3 V Supply 9
9.3. Electrical Characteristics – 2.5 V Supply 10
9.4. Supply Current Characteristics – 5 V Supply 11
9.5. Supply Current Characteristics – 3.3 V Supply 13
9.6. Supply Current Characteristics – 2.5 V Supply 15
10. Insulation Specifications 17
11. Safety Limiting Values 18
12. Test Circuit 19
13. Characteristics Curves (Note) 34
14. Application Note 36
15. Package Information 37
RESTRICTIONS ON PRODUCT USE 38

©2026
Toshiba Electronic Devices & Storage Corporation

Downloaded from Arrow.com.

4. Internal Circuit (Simplified Schematic)

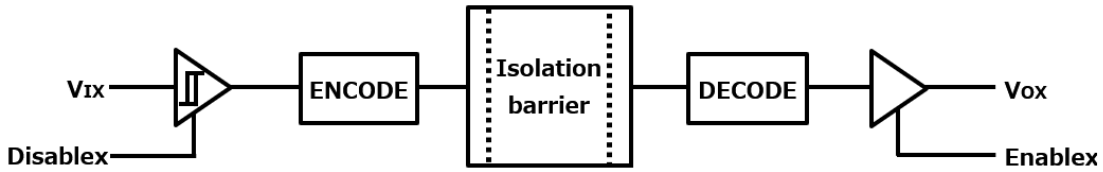

5. Pin configuration and Functions

DCL540C01 / DCL540D01

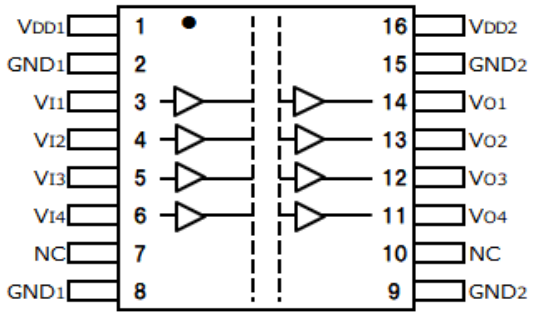

DCL541A01 / DCL541B01

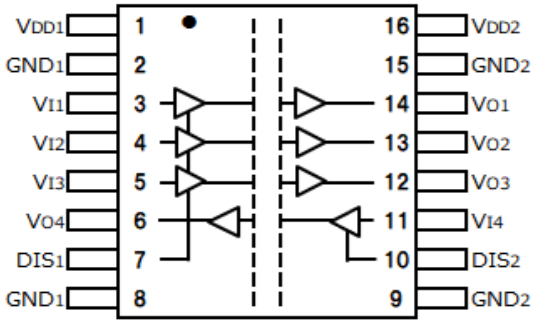

DCL540L01 / DCL540H01

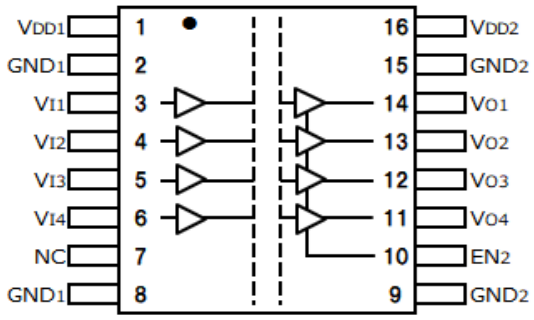

DCL541L01 / DCL541H01

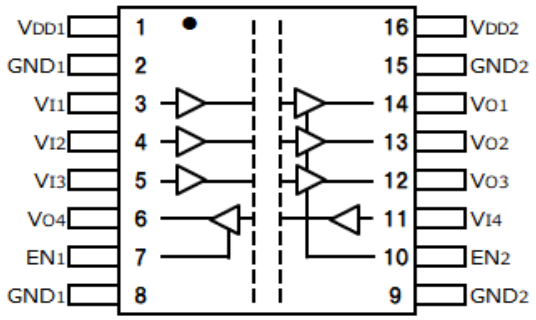

DCL542L01 / DCL542H01

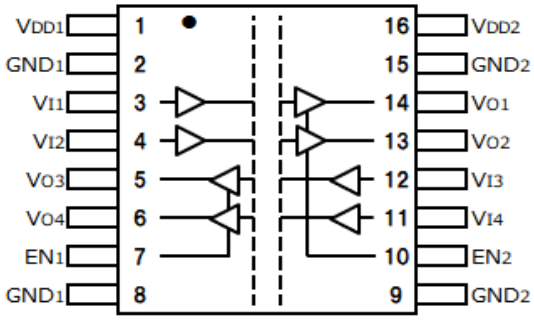

Downloaded from Arrow.com.

5.1. Pin Functions

PIN						I/O	DESCRIPTION
NAME	DCL540 C01 D01	DCL540 L01 H01	DCL541 A01 B01	DCL541 L01 H01	DCL542 L01 H01		
VDD_1	1	1	1	1	1	-	Power Supply, side 1
GND_1	2,8	2,8	2,8	2,8	2,8	-	GND connection for VDD_1 , side 1
V_{I1}	3	3	3	3	3	I	Input, Channel1
V_{I2}	4	4	4	4	4	I	Input, Channel2
V_{I3}	5	5	5	5	12	I	Input, Channel3
V_{I4}	6	11	6	11	11	I	Input, Channel4
NC	7,10	-	7	-	-	-	Non connected
DIS_1	-	7	-	-	-	I	Input disable 1. Input pins on side 1 are disabled when DIS_1 is high, and in enabled state when DIS_1 is low or open.
EN_1	-	-	-	7	7	I	Input enable 1. Input pins on side 1 are enabled when EN_2 is high or open, and in high impedance state when EN_2 is low.
GND_2	9,15	9,15	9,15	9,15	9,15	-	GND connection for VDD_2, side 2
DIS_2	-	10	-	-	-	I	Input disable 2. Input pins on side 2 are disabled when DIS_2 is high, and in enabled state when DIS_2 is low or open.
EN_2	-	-	10	10	10	I	Input enable 2. Input pins on side 2 are enabled when EN_2 is high or open, and in high impedance state when EN_2 is low.
V_{o4}	11	6	11	6	6	O	Output, Channel4
V_{o3}	12	12	12	12	5	O	Output, Channel3
V_{o2}	13	13	13	13	13	O	Output, Channel2
V_{o1}	14	14	14	14	14	O	Output, Channel1
VDD_2	16	16	16	16	16	-	Power Supply, side 2

Downloaded from Arrow.com.

6. Functional Description

(1) DCL540C01/ DCL540D01

V_{DD1}	V_{DD2}	INPUT (V_{ix})	OUTPUT (V_{Ox})	COMMENTS
PU	PU	L	L	Normal Operation
		H	H	
		OPEN	Default	Default mode DCL540C01=L , DCL540D01=H
PD		L or OPEN		
PU	PD	X	Undetermined	When VDD_2 is unpowered, a channel output is undetermined.
PD		L or OPEN		
PD	X	H	-	Don't use, since a certain voltage will be output through the internal ESD circuit.

PU= Powered up (VDD≥2.25 V), PD= Powered down (VDD≤1.7 V), H= High level, L= Low level, X= Don't care

(2) DCL540L01/ DCL540H01/ DCL541L01/ DCL541H01/ DCL542L01/ DCL542H01

V_{DD1}	V_{DD2}	OUTPUT ENABLE (EN_x)	INPUT (V_{Ix})	OUTPUT (V_{Ox})	COMMENTS
PU	PU	H or OPEN	L	L	Normal Operation
			H	H	
			OPEN	Default	Default mode DCL540L01=L , DCL540H01=H
		L	X	Z	Output Disable mode
PD	PU	H or OPEN	L or OPEN	Default	Default mode DCL540L01=L , DCL540H01=H
		L		Z	Output Disable mode
	X	X	H	-	Don't use, since a certain voltage will be output through the internal ESD circuit.
PU	PD	L or OPEN	X	Undetermined	When VDD_2 is unpowered, a channel output is undetermined.
PD			L or OPEN		
X		H	X	-	Don't use, since a certain voltage will be output through the internal ESD circuit.

PU= Powered up (VDD≥2.25 V), PD= Powered down (VDD≤1.7 V), H= High level, L= Low level, X= Don't care

©2026
Toshiba Electronic Devices & Storage Corporation

Downloaded from Arrow.com.

(3) DCL541A01/ DCL541B01

V_{DD1}	V_{DD2}	INPUT DISABLE (DIS_x)	INPUT (V_{Ix})	OUTPUT (V_{Ox})	COMMENTS
PU	PU	L or OPEN	L	L	Normal Operation
			H	H	
			OPEN	Default	Default mode DCL541A01=L , DCL541B01=H
		H	X		Input Disable mode DCL541A01=L , DCL541B01=H
	PD	X	X	Undetermined	When V_{DD2} is unpowered, a channel output is undetermined.
PD	X	H	X	Don't use	Don’t use, since a certain voltage will be output through the internal ESD circuit.
		X	H		
	PU	L or OPEN	L or OPEN	Default	Default mode DCL541A01=L , DCL541B01=H
	PD			Undetermined	When V_{DD2} is unpowered, a channel output is undetermined.

V_{DDI}: Input V_{DDx} , V_{DDO}: Output V_{DDx} , PU= Powered up (VDD≥2.25 V), PD=Powered down (VDD≤1.7 V),
H=High Level, L=Low Level, X= Don’t care

Downloaded from Arrow.com.

7. Absolute Maximum Ratings (T_a = 25 °C)

PARAMETER	SYMBOL	MIN	MAX	UNIT
Power supply voltage	V_{DD1}, V_{DD2}	-0.5	6.0	V
Input Voltage	V_I	-0.5	V_{DDX}+0.5 (Note1)	V
Output Voltage	V_O	-0.5	V_{DDX}+0.5 (Note1)	V
Output Current	I_O	-15	15	mA
Storage Temperature	T_{stg}	-65	150	°C
Operating Temperature	T_{opr}	-40	110	°C
Soldering Temperature (10 s)	T_{sol}	-	260	°C
Maximum Withstanding Isolation Voltage (1 min.)	BV_S	-	5000	Vrms

Note 1: Maximum voltage must not exceed 6 V. X = 1 or 2.

8. Recommended Operating Conditions (Note)

PARAMETER	SYMBOL	MIN	MAX	UNIT
Power supply voltage	V_{DD1}, V_{DD2}	2.25	5.5	V
Junction Temperature	T_J	-40	150	°C
Ambient Temperature	T_a	-40	110	°C

Note: The recommended operating conditions are given as a design guide necessary to obtain the intended performance of the device. Each parameter is an independent value. When creating a system design using this device, the electrical characteristics specified in this data sheet should also be considered.

Note: A ceramic capacitor (0.1 μF) should be connected between pin 1 (V_{DD1}) and pin 2 (GND_1) for VDD1 and between pin 16 (V_{DD2}) and pin 15 (GND2) for VDD2, and should be the layout on the IC as close as possible (less than 10 mm).
Otherwise, the IC may not switch properly.

Downloaded from Arrow.com.

9. Electrical Characteristics

9.1. Electrical Characteristics – 5 V Supply

All typical specifications are at T_a=25 °C, V_{DD1}=V_{DD2}=5 V. Minimum/maximum specifications apply over the entire recommended operating range of 4.5 V≤V_{DD1}≤5.5 V, 4.5 V≤V_{DD2}≤5.5 V, and -40 °C≤T_a≤110 °C, unless otherwise noted.

PARAMETER	TEST CONDITIONS	Fig.	SYMBOL	MIN	TYP.	MAX	UNIT
DC SPECIFICATIONS							
Under voltage Lockout	Threshold when supply voltage is rising	12.1	VDD_{xUV+}	-	2.1	2.25	V
	Threshold when supply voltage is falling		VDD_{xUV-}	1.7	1.9	-	
	Supply voltage hysteresis		VDD_{xUVH}	0.1	0.2	-	
Output Voltage Logic High	V_{Ix}=H , I_{OH}=-20 μA	12.2	V_{OH}	V_{DDO}-0.1 (Note1)	V_{DDO} (Note1)	-	V
	V_{Ix}=H , I_{OH}=-4 mA			V_{DDO}-0.4 (Note1)	V_{DDO}-0.2 (Note1)	-	
Output Voltage Logic Low	V_{Ix}=L , I_{OL} =20 μA	12.2	V_{OL}	-	0.0	0.1	V
	V_{Ix}=L , I_{OL} =4 mA			-	0.2	0.4	
Output impedance	-	12.2	Z_O	-	50	-	Ω
High-level input voltage	-	12.3	V_{IH}	0.7*V_{DDI} (Note1)	-	-	V
Low-level input voltage	-	12.3	V_{IL}	-	-	0.3*V_{DDI} (Note1)	V
Input Voltage Hysteresis	-	12.3	V_{HYS}	-	0.37	-	V
Input Current	V_I= V_{DDI} or 0 V (Note1)	-	I_I	-	-	±10	μA
SWITCHING SPECIFICATIONS							
Data Rate	-	-	t_{bps}	DC	-	150	Mbps
Pulse Width	-	-	PW	6.6	-	-	ns
Propagation Delay	50 kHz,Duty=50 %, t_r=t_f=2 ns,C_L=15 pF	12.4	t_{pHL} , t_{pLH}	-	10.9	18.3	ns
Pulse Width Distortion	|t_{PHL} – t_{PLH}|	12.4	PWD	-	0.8	2.8	ns
Propagation Delay Skew (Between any two units)	(Note 2)	-	t_{PSK}	-	-	10	ns
Channel Matching	Same Direction	12.4	t_{skCD}	-	-	3.2	ns
	Opposing Direction	12.4	t_{skOD}	-	-	3.6	
Output Rise Time	10 % - 90 %	12.4	t_r	-	0.9	-	ns
Output Fall Time	90 % - 10 %	12.4	t_f	-	0.9	-	ns
Enable 3-state output enable time	50 kHz, Duty=50 %, tr=tf=2 ns,CL=15 pF (Note 3)	12.5	t_{pZL} , t_{pZH}	-	-	15.0	ns
Enable 3-state output disable time		12.5	t_{pLZ} , t_{pHZ}	-	-	18.0	ns
Disable output enable time	50 kHz, Duty=50 %, tr=tf=2 ns,CL=15 pF	12.6	t_{p_EN} ,	-	-	23.0	ns
Disable output disable time		12.6	t_{p_DIS}	-	-	23.0	ns
Common mode transient immunity	V_I= V_{DDI} or 0 V, (Note1) V_{CM}=1500 V, Ta=25 °C	12.7	| CMTI |	100	150	-	kV/μs

Note 1: V_{DDI}=Input-side V_{DDx} , V_{DDO}=Output-side V_{DDx}
Note 2: Propagation delay difference (between parts) is applied under the same operating conditions (power supply voltage. input current, temperature conditions, etc.).
Note 3: When EN_x signal is changed from Low to High or OPEN, the output signal(V_{Ox}) is valid after the output enable time. The output signal(V_{Ox}) within the output enable time is undefined.

©2026
Toshiba Electronic Devices & Storage Corporation

Downloaded from Arrow.com.

9.2. Electrical Characteristics – 3.3 V Supply

All typical specifications are at T_a=25 °C, V_{DD1}=V_{DD2}=3.3 V. Minimum/maximum specifications apply over the entire recommended operating range of 3.0 V≤V_{DD1}≤3.6 V, 3.0 V≤V_{DD2}≤3.6 V, and -40 °C≤T_a≤110 °C, unless otherwise noted.

PARAMETER	TEST CONDITIONS	Fig.	SYMBOL	MIN	TYP.	MAX	UNIT
DC SPECIFICATIONS							
Under voltage Lockout	Threshold when supply voltage is rising	12.1	VDD_{xUV+}	-	2.1	2.25	V
	Threshold when supply voltage is falling		VDD_{xUV-}	1.7	1.9	-	
	Supply voltage hysteresis		VDD_{xUVH}	0.1	0.2	-	
Output Voltage Logic High	V_{Ix}=H , I_{OH}=-20 μA	12.2	V_{OH}	V_{DDO}-0.1 (Note1)	V_{DDO} (Note1)	-	V
	V_{Ix}=H , I_{OH}=-4 mA			V_{DDO}-0.4 (Note1)	V_{DDO}-0.2 (Note1)	-	
Output Voltage Logic Low	V_{Ix}=L , I_{OL} =20 μA	12.2	V_{OL}	-	0.0	0.1	V
	V_{Ix}=L , I_{OL} =4 mA			-	0.2	0.4	
Output impedance	-	12.2	Z_O	-	50	-	Ω
High-level input voltage	-	12.3	V_{IH}	0.7*V_{DDI} (Note1)	-	-	V
Low-level input voltage	-	12.3	V_{IL}	-	-	0.3*V_{DDI} (Note1)	V
Input Voltage Hysteresis	-	12.3	V_{HYS}	-	0.32	-	V
Input Current	V_I= V_{DDI} or 0 V (Note1)	-	I_I	-	-	±10	μA
SWITCHING SPECIFICATIONS							
Data Rate	-	-	t_{bps}	DC	-	150	Mbps
Pulse Width	-	-	PW	6.6	-	-	ns
Propagation Delay	50 kHz,Duty=50 %, t_r=t_f=2 ns,C_L=15 pF	12.4	t_{pHL} , t_{pLH}	-	11.6	19.1	ns
Pulse Width Distortion	|t_{PHL} – t_{PLH}|	12.4	PWD	-	0.8	2.8	ns
Propagation Delay Skew (Between any two units)	(Note 2)	-	t_{PSK}	-	-	10	ns
Channel Matching	Same Direction	12.4	t_{skCD}	-	-	3.3	ns
	Opposing Direction	12.4	t_{skOD}	-	-	3.7	
Output Rise Time	10 % - 90 %	12.4	t_r	-	0.8	-	ns
Output Fall Time	90 % - 10 %	12.4	t_f	-	0.8	-	ns
Enable 3-state output enable time	50 kHz, Duty=50 %, tr=tf=2 ns,CL=15 pF (Note 3)	12.5	t_{pZL} , t_{pZH}	-	-	15.0	ns
Enable 3-state output disable time		12.5	t_{pLZ} , t_{pHZ}	-	-	18.0	ns
Disable output enable time	50 kHz, Duty=50 %, tr=tf=2 ns,CL=15 pF	12.6	t_{p_EN} ,	-	-	23.0	ns
Disable output disable time		12.6	t_{p_DIS}	-	-	23.0	ns
Common mode transient immunity	V_I= V_{DDI} or 0 V, (Note1) V_{CM}=1500 V, Ta=25 °C	12.7	| CMTI |	100	150	-	kV/μs

Note 1: V_{DDI}=Input-side V_{DDx} , V_{DDO}=Output-side V_{DDx}
Note 2: Propagation delay difference (between parts) is applied under the same operating conditions (power supply voltage. input current, temperature conditions, etc.).
Note 3: When EN_x signal is changed from Low to High or OPEN, the output signal(V_{Ox}) is valid after the output enable time. The output signal(V_{Ox}) within the output enable time is undefined)

Downloaded from Arrow.com.

9.3. Electrical Characteristics – 2.5 V Supply

All typical specifications are at T_a=25 °C, V_{DD1}=V_{DD2}=2.5 V. Minimum/maximum specifications apply over the entire recommended operating range of 2.25 V≤V_{DD1}≤2.75 V, 2.25 V≤V_{DD2}≤2.75 V, and -40 °C≤T_a≤110 °C, unless otherwise noted.

PARAMETER	TEST CONDITIONS	Fig.	SYMBOL	MIN	TYP.	MAX	UNIT
DC SPECIFICATIONS							
Under voltage Lockout	Threshold when supply voltage is rising	12.1	VDD_{xUV+}	-	2.1	2.25	V
	Threshold when supply voltage is falling		VDD_{xUV-}	1.7	1.9	-	
	Supply voltage hysteresis		VDD_{xUVH}	0.1	0.2	-	
Output Voltage Logic High	V_{Ix}=H , I_{OH}=-20 μA	12.2	V_{OH}	V_{DDO}-0.1 (Note1)	V_{DDO} (Note1)	-	V
	V_{Ix}=H , I_{OH}=-4 mA			V_{DDO}-0.4 (Note1)	V_{DDO}-0.2 (Note1)	-	
Output Voltage Logic Low	V_{Ix}=L , I_{OL} =20 μA	12.2	V_{OL}	-	0.0	0.1	V
	V_{Ix}=L , I_{OL} =4 mA			-	0.2	0.4	
Output impedance	-	12.2	Z_O	-	50	-	Ω
High-level input voltage	-	12.3	V_{IH}	0.7*V_{DDI} (Note1)	-	-	V
Low-level input voltage	-	12.3	V_{IL}	-	-	0.3*V_{DDI} (Note1)	V
Input Voltage Hysteresis	-	12.3	V_{HYS}	-	0.32	-	V
Input Current	V_I= V_{DDI} or 0 V (Note1)	-	I_I	-	-	±10	μA
SWITCHING SPECIFICATIONS							
Data Rate	-	-	t_{bps}	DC	-	150	Mbps
Pulse Width	-	-	PW	6.6	-	-	ns
Propagation Delay	50 kHz,Duty=50 %, t_r=t_f=2 ns,C_L=15 pF	12.4	t_{pHL} , t_{pLH}	-	12.6	21.0	ns
Pulse Width Distortion	|t_{PHL} – t_{PLH}|	12.4	PWD	-	1.0	3.0	ns
Propagation Delay Skew (Between any two units)	(Note 2)	-	t_{PSK}	-	-	10	ns
Channel Matching	Same Direction	12.4	t_{skCD}	-	-	3.5	ns
	Opposing Direction	12.4	t_{skOD}	-	-	3.9	
Output Rise Time	10 % - 90 %	12.4	t_r	-	0.8	-	ns
Output Fall Time	90 % - 10 %	12.4	t_f	-	0.8	-	ns
Enable 3-state output enable time	50 kHz, Duty=50 %, tr=tf=2 ns,CL=15 pF (Note 3)	12.5	t_{pZL} , t_{pZH}	-	-	15.0	ns
Enable 3-state output disable time		12.5	t_{pLZ} , t_{pHZ}	-	-	18.0	ns
Disable output enable time	50 kHz, Duty=50 %, tr=tf=2 ns,CL=15 pF	12.6	t_{p_EN}	-	-	23.0	ns
Disable output disable time		12.6	t_{p_DIS}	-	-	23.0	ns
Common mode transient immunity	V_I= V_{DDI} or 0 V, (Note1) V_{CM}=1500 V, Ta=25 °C	12.7	| CMTI |	100	150	-	kV/μs

Note 1: V_{DDI}=Input-side V_{DDx} , V_{DDO}=Output-side V_{DDx}
Note 2: Propagation delay difference (between parts) is applied under the same operating conditions (power supply voltage. input current, temperature conditions, etc.)..
Note 3: When EN_x signal is changed from Low to High or OPEN, the output signal(V_{Ox}) is valid after the output enable time. The output signal(V_{Ox}) within the output enable time is undefined)

Downloaded from Arrow.com.

9.4. Supply Current Characteristics – 5 V Supply

All typical specifications are at T_a=25 °C, V_{DD1}=V_{DD2}=5 V. Minimum/maximum specifications apply over the entire recommended operating range of 4.5 V≤V_{DD1}≤5.5 V, 4.5 V≤V_{DD2}≤5.5 V, and -40 °C≤T_a≤110 °C, unless otherwise noted.

(1) DCL540x01

PARAMETER	TEST CONDITIONS	SYMBOL	MIN	TYP.	MAX	UNIT
Supply Current (DC Signal)	VI=0(DCL540C01 , DCL540L01) , VI=1(DCL540D01 , DCL540H01)	$I_{DD1(Q)}$	-	2.1	3.0	mA
		$I_{DD2(Q)}$	-	5.0	7.3	mA
	VI=0(DCL540D01 , DCL540H01) , VI=1(DCL540C01 , DCL540L01)	$I_{DD1(Q)}$	-	19.6	28.1	mA
		$I_{DD2(Q)}$	-	5.3	7.6	mA
1 Mbps	f_{CLK}=500 kHz, duty=50 % cycle square wave. C_L=15 pF	$I_{DD1(1)}$	-	11.2	17.5	mA
		$I_{DD2(1)}$	-	5.4	8.3	mA
25 Mbps	f_{CLK}=12.5 MHz, duty=50 % cycle square wave. C_L=15 pF	$I_{DD1(25)}$	-	11.0	17.1	mA
		$I_{DD2(25)}$	-	9.8	14.7	mA
100 Mbps	f_{CLK}=50 MHz, duty=50 % cycle square wave. C_L=15 pF	$I_{DD1(100)}$	-	12.4	18.4	mA
		$I_{DD2(100)}$	-	25.2	37.1	mA

(2) DCL541x01

PARAMETER	TEST CONDITIONS	SYMBOL	MIN	TYP.	MAX	UNIT
Supply Current (DC Signal)	V_I=0 (DCL541A01, DCL541L01) V_I=1 (DCL541B01, DCL541H01)	$I_{DD1(Q)}$	-	3.0	4.3	mA
		$I_{DD2(Q)}$	-	4.5	6.6	mA
	V_I=0 (DCL541B01, DCL541H01) V_I=1 (DCL541A01, DCL541L01)	$I_{DD1(Q)}$	-	16.6	22.5	mA
		$I_{DD2(Q)}$	-	10.2	14.1	mA
1 Mbps	f_{CLK}=500 kHz, duty=50 % cycle square wave. C_L=15 pF	$I_{DD1(1)}$	-	10.0	15.5	mA
		$I_{DD2(1)}$	-	7.6	10.2	mA
25 Mbps	f_{CLK}=12.5 MHz, duty=50 % cycle square wave. C_L=15 pF	$I_{DD1(25)}$	-	12.1	18.2	mA
		$I_{DD2(25)}$	-	10.6	15.4	mA
100 Mbps	f_{CLK}=50 MHz, duty=50 % cycle square wave. C_L=15 pF	$I_{DD1(100)}$	-	17.4	24.5	mA
		$I_{DD2(100)}$	-	22.5	35.2	mA

Downloaded from Arrow.com.

(3) DCL542x01

PARAMETER	TEST CONDITIONS	SYMBOL	MIN	TYP.	MAX	UNIT
Supply Current (DC Signal)	VI=0(DCL542L01) , VI=1(DCL542H01)	$I_{DD1(Q)}$	-	3.8	5.5	mA
		$I_{DD2(Q)}$	-	3.8	5.5	mA
	VI=0(DCL542H01) , VI=1(DCL542L01)	$I_{DD1(Q)}$	-	13.4	18.3	mA
		$I_{DD2(Q)}$	-	13.4	18.3	mA
1 Mbps	f_{CLK}=500 kHz, duty=50 % cycle square wave. C_L=15 pF	$I_{DD1(1)}$	-	8.8	12.9	mA
		$I_{DD2(1)}$	-	8.8	12.9	mA
25 Mbps	f_{CLK}=12.5 MHz, duty=50 % cycle square wave. C_L=15 pF	$I_{DD1(25)}$	-	11.4	16.8	mA
		$I_{DD2(25)}$	-	11.4	16.8	mA
100 Mbps	f_{CLK}=50 MHz, duty=50 % cycle square wave. C_L=15 pF	$I_{DD1(100)}$	-	20.0	29.9	mA
		$I_{DD2(100)}$	-	20.0	29.9	mA

©2026
Toshiba Electronic Devices & Storage Corporation

Downloaded from Arrow.com.

9.5. Supply Current Characteristics – 3.3 V Supply

All typical specifications are at T_a=25 °C, V_{DD1}=V_{DD2}=3.3 V. Minimum/maximum specifications apply over the entire recommended operating range of 3.0 V≤V_{DD1}≤3.6 V, 3.0 V≤V_{DD2}≤3.6 V, and -40 °C≤T_a≤110 °C, unless otherwise noted.

(1) DCL540x01

PARAMETER	TEST CONDITIONS	SYMBOL	MIN	TYP.	MAX	UNIT
Supply Current (DC Signal)	VI=0(DCL540C01 , DCL540L01) , VI=1(DCL540D01 , DCL540H01)	$I_{DD1(Q)}$	-	2.0	2.9	mA
		$I_{DD2(Q)}$	-	4.9	7.1	mA
	VI=0(DCL540D01 , DCL540H01) , VI=1(DCL540C01 , DCL540L01)	$I_{DD1(Q)}$	-	19.4	27.7	mA
		$I_{DD2(Q)}$	-	5.2	7.4	mA
1 Mbps	f_{CLK}=500 kHz, duty=50 % cycle square wave. C_L=15 pF	$I_{DD1(1)}$	-	11.0	16.7	mA
		$I_{DD2(1)}$	-	5.2	7.8	mA
25 Mbps	f_{CLK}=12.5 MHz, duty=50 % cycle square wave. C_L=15 pF	$I_{DD1(25)}$	-	10.6	16.0	mA
		$I_{DD2(25)}$	-	8.2	12.4	mA
100 Mbps	f_{CLK}=50 MHz, duty=50 % cycle square wave. C_L=15 pF	$I_{DD1(100)}$	-	11.6	16.6	mA
		$I_{DD2(100)}$	-	16.5	29.3	mA

(2) DCL541x01

PARAMETER	TEST CONDITIONS	SYMBOL	MIN	TYP.	MAX	UNIT
Supply Current (DC Signal)	V_I=0 (DCL541A01, DCL541L01) V_I=1 (DCL541B01, DCL541H01)	$I_{DD1(Q)}$	-	2.9	4.1	mA
		$I_{DD2(Q)}$	-	4.4	6.5	mA
	V_I=0 (DCL541B01, DCL541H01) V_I=1 (DCL541A01, DCL541L01)	$I_{DD1(Q)}$	-	16.5	22.3	mA
		$I_{DD2(Q)}$	-	10.1	14.0	mA
1 Mbps	f_{CLK}=500 kHz, duty=50 % cycle square wave. C_L=15 pF	$I_{DD1(1)}$	-	9.9	14.9	mA
		$I_{DD2(1)}$	-	7.5	9.5	mA
25 Mbps	f_{CLK}=12.5 MHz, duty=50 % cycle square wave. C_L=15 pF	$I_{DD1(25)}$	-	10.8	16.6	mA
		$I_{DD2(25)}$	-	9.7	12.8	mA
100 Mbps	f_{CLK}=50 MHz, duty=50 % cycle square wave. C_L=15 pF	$I_{DD1(100)}$	-	14.5	19.9	mA
		$I_{DD2(100)}$	-	16.6	26.0	mA

©2026
Toshiba Electronic Devices & Storage Corporation

Downloaded from Arrow.com.

(3) DCL542x01

PARAMETER	TEST CONDITIONS	SYMBOL	MIN	TYP.	MAX	UNIT
Supply Current (DC Signal)	V_I=0 (DCL542L01) V_I=1 (DCL542H01)	$I_{DD1(Q)}$	-	3.7	5.3	mA
		$I_{DD2(Q)}$	-	3.7	5.3	mA
	V_I=0 (DCL542H01) V_I=1 (DCL542L01)	$I_{DD1(Q)}$	-	13.3	18.2	mA
		$I_{DD2(Q)}$	-	13.3	18.2	mA
1 Mbps	f_{CLK}=500 kHz, duty=50 % cycle square wave. C_L=15 pF	$I_{DD1(1)}$	-	8.7	12.2	mA
		$I_{DD2(1)}$	-	8.7	12.2	mA
25 Mbps	f_{CLK}=12.5 MHz, duty=50 % cycle square wave. C_L=15 pF	$I_{DD1(25)}$	-	10.3	14.7	mA
		$I_{DD2(25)}$	-	10.3	14.7	mA
100 Mbps	f_{CLK}=50 MHz, duty=50 % cycle square wave. C_L=15 pF	$I_{DD1(100)}$	-	15.6	23.0	mA
		$I_{DD2(100)}$	-	15.6	23.0	mA

©2026
Toshiba Electronic Devices & Storage Corporation

Downloaded from Arrow.com.

9.6. Supply Current Characteristics – 2.5 V Supply

All typical specifications are at T_a=25 °C, V_{DD1}=V_{DD2}=2.5 V. Minimum/maximum specifications apply over the entire recommended operating range of 2.25 V≤V_{DD1}≤2.75 V, 2.25 V≤V_{DD2}≤2.75 V, and -40 °C≤T_a≤110 °C, unless otherwise noted

(1) DCL540x01

PARAMETER	TEST CONDITIONS	SYMBOL	MIN	TYP.	MAX	UNIT
Supply Current (DC Signal)	VI=0(DCL541A01) , VI=1(DCL541B01)	$I_{DD1(Q)}$	-	1.9	2.8	mA
		$I_{DD2(Q)}$	-	4.9	7.0	mA
	VI=0(DCL541B01) , VI=1(DCL541A01)	$I_{DD1(Q)}$	-	19.3	27.6	mA
		$I_{DD2(Q)}$	-	5.2	7.3	mA
1 Mbps	f_{CLK}=50 MHz, duty=50 % cycle square wave. C_L=15 pF	$I_{DD1(1)}$	-	11.0	16.6	mA
		$I_{DD2(1)}$	-	5.2	7.7	mA
25 Mbps	f_{CLK}=500 kHz, duty=50 % cycle square wave. C_L=15 pF	$I_{DD1(25)}$	-	10.4	15.8	mA
		$I_{DD2(25)}$	-	7.5	11.6	mA
100 Mbps	f_{CLK}=12.5 MHz, duty=50 % cycle square wave. C_L=15 pF	$I_{DD1(100)}$	-	11.5	16.3	mA
		$I_{DD2(100)}$	-	13.6	25.8	mA

(2) DCL541x01

PARAMETER	TEST CONDITIONS	SYMBOL	MIN	TYP.	MAX	UNIT
Supply Current (DC Signal)	V_I=0 (DCL541A01, DCL541L01) V_I=1 (DCL541B01, DCL541H01)	$I_{DD1(Q)}$	-	2.9	4.1	mA
		$I_{DD2(Q)}$	-	4.5	6.4	mA
	V_I=0 (DCL541B01, DCL541H01) V_I=1 (DCL541A01, DCL541L01)	$I_{DD1(Q)}$	-	16.4	22.2	mA
		$I_{DD2(Q)}$	-	10.0	13.9	mA
1 Mbps	f_{CLK}=500 kHz, duty=50 % cycle square wave. C_L=15 pF	$I_{DD1(1)}$	-	9.8	14.8	mA
		$I_{DD2(1)}$	-	7.4	9.5	mA
25 Mbps	f_{CLK}=12.5 MHz, duty=50 % cycle square wave. C_L=15 pF	$I_{DD1(25)}$	-	10.4	16.1	mA
		$I_{DD2(25)}$	-	9.2	12.2	mA
100 Mbps	f_{CLK}=50 MHz, duty=50 % cycle square wave. C_L=15 pF	$I_{DD1(100)}$	-	13.1	18.2	mA
		$I_{DD2(100)}$	-	14.3	24.1	mA

Downloaded from Arrow.com.

(3) DCL542x01

PARAMETER	TEST CONDITIONS	SYMBOL	MIN	TYP.	MAX	UNIT
Supply Current (DC Signal)	V_I=0 (DCL542L01) V_I=1 (DCL541H01)	$I_{DD1(Q)}$	-	3.7	5.3	mA
		$I_{DD2(Q)}$	-	3.7	5.3	mA
	V_I=0 (DCL542H01) V_I=1 (DCL542L01)	$I_{DD1(Q)}$	-	13.2	18.1	mA
		$I_{DD2(Q)}$	-	13.2	18.1	mA
1 Mbps	f_{CLK}=500 kHz, duty=50 % cycle square wave. C_L=15 pF	$I_{DD1(1)}$	-	8.6	12.2	mA
		$I_{DD2(1)}$	-	8.6	12.2	mA
25 Mbps	f_{CLK}=12.5 MHz, duty=50 % cycle square wave. C_L=15 pF	$I_{DD1(25)}$	-	9.8	14.2	mA
		$I_{DD2(25)}$	-	9.8	14.2	mA
100 Mbps	f_{CLK}=50 MHz, duty=50 % cycle square wave. C_L=15 pF	$I_{DD1(100)}$	-	13.7	21.2	mA
		$I_{DD2(100)}$	-	13.7	21.2	mA

©2026
Toshiba Electronic Devices & Storage Corporation

Downloaded from Arrow.com.

10. Insulation Specifications

PARAMETER	Symbol	TEST CONDITIONS	VALUE	UNIT
Minimum External Clearance	CLR	Shortest terminal-to-terminal distance through air	8	mm
Minimum External Creepage	CPG	Shortest terminal-to-terminal distance across the package surface	8	mm
Distance Through The Insulation	DTI	Minimum internal gap	17	µm
Comparative Tracking Index	CTI		600	V
Material Group	-	According to IEC 60664-1	I	-
Overvoltage Category Per IEC 60664-1	-	Related Mains Voltage ≤ 300 V_{rms}	I-IV	-
	-	Related Mains Voltage ≤ 600 V_{rms}	I-IV	-
	-	Related Mains Voltage ≤ 1000 V_{rms}	I-III	-
DIN EN IEC 60747-17; (VDE 0884-17)				
Maximum Repetitive Peak Isolation Voltage	V_{IORM}	AC voltage (bipolar)	1414	V_{PK}
Maximum Transient Isolation Voltage	V_{IOTM}	$V_{TEST} = V_{IOTM}$, t = 60 s (qualification) , V_{TEST}= 1.2 x V_{IOTM}, t = 1 s (100 % production)	8000	V_{PK}
Maximum Impulse Voltage	V_{IMP}	IEC 62368-1, 1.2/50 µs waveform	8000	V_{PK}
Maximum surge isolation voltage	V_{IOSM}	Test method per IEC 62368-1, 1.2/50 µs waveform, $V_{IOSM} \geq 1.3 \times V_{IMP}$ (qualification)	12800	V_{PK}
Apparent charge measuring voltage	$V_{pd(m)}$	Method A, After Input/Output safety test subgroup2&3, $V_{ini,a}=V_{IOTM}$, $V_{pd(m)}$=1.2 x V_{IORM} t_{ini} = 60 s, t_m = 10 s, partial discharge < 5 pC	1697	V_{PK}
		Method A, After environmental tests subgroup 1, $V_{ini,a}=V_{IOTM}$, $V_{pd(m)}$=1.6 x V_{IORM} t_{ini} = 60 s, t_m = 10 s, partial discharge < 5 pC	2263	
		Method B1; At routine test (100 % production) and preconditioning (type test) $V_{ini,b} \geq 1.2$ x V_{IOTM}, $V_{pd(m)}$=1.875 x V_{IORM} $t_{ini,b}$ = 1 s, t_m = 1 s partial discharge < 5 pC	2652	
Barrier capacitance, input to output	C_{IO}	f = 1 MHz	1.5	pF
Input Capacitance	C_I	V_{IX}	1.8	pF
Isolation Resistance	R_{IO}	V_{IO} = 500 V, T_A = 25 °C	$>10^{12}$	Ω
		V_{IO} = 500 V, 100 °C ≤ T_A ≤ 110 °C	$>10^{11}$	
		V_{IO} = 500 V at T_S = 150 °C	$>10^{9}$	
Pollution Degree	-	-	2	-
Climatic Category	-	-	40/110/21	-
UL 1577				
Maximum Withstand Isolation Voltage	V_{ISO}	$V_{TEST} = V_{ISO}$, t = 60 s (qualification), $V_{TEST} = 1.2 \times V_{ISO}$, t = 1 s (100 % production)	5000	V_{rms}

©2026
Toshiba Electronic Devices & Storage Corporation

Downloaded from Arrow.com.

11. Safety Limiting Values

PARAMETER	Symbol	TEST CONDITIONS	Value	Unit
Safety Input, Output Or Supply Current	I_S	V_{DD1}=V_{DD2}=5.5 V, Tj=150 °C, Ta=25 °C	284	mA
		V_{DD1}=V_{DD2}=3.6 V, Tj=150 °C, Ta=25 °C	434	mA
		V_{DD1}=V_{DD2}=2.75 V, Tj=150 °C, Ta=25 °C	568	mA
Safety Input, Output Or Total Power	P_S	Tj=150 °C, Ta=25 °C	1562	mW
Maximum Safety Temperature	T_S	-	150	°C

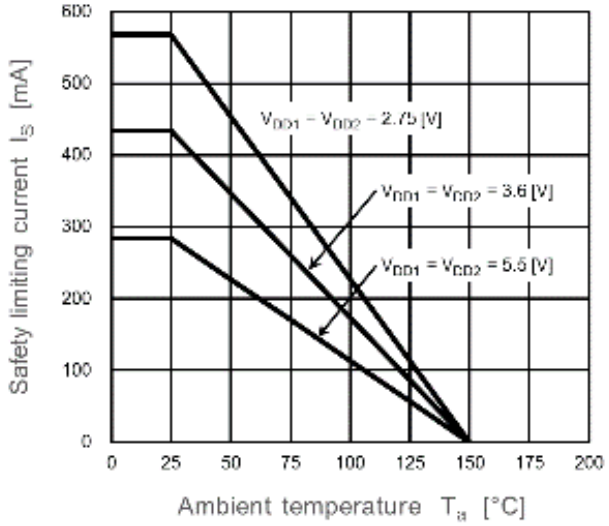

Fig. 11.1. Thermal Derating Curve for Safety Limiting Current - Ta

Downloaded from Arrow.com.

12. Test Circuit

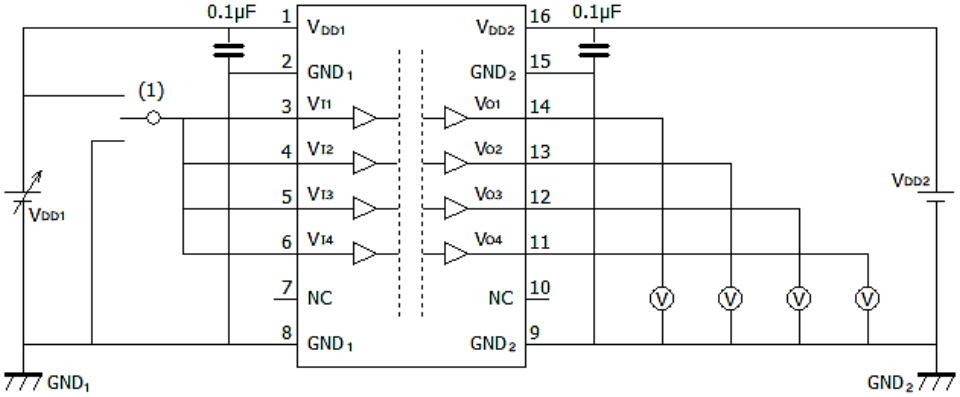

1: Default=L : V_{DD1} , Default=H : GND_1

Fig.12.1.1. DCL540C01/DCL540D01 V_{DD1UV+}/ V_{DD1UV-} Test Circuit

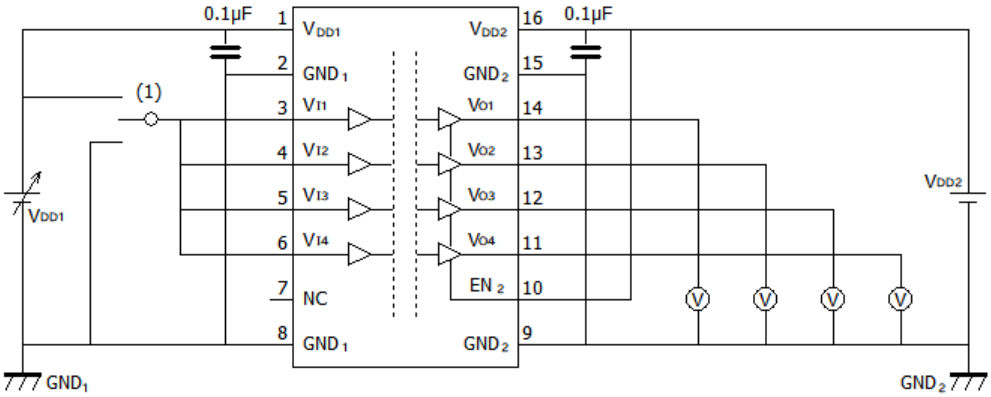

1: Default=L : V_{DD1} , Default=H : GND_1

Fig.12.1.2. DCL540L01/DCL540H01 V_{DD1UV+}/ V_{DD1UV-} Test Circuit

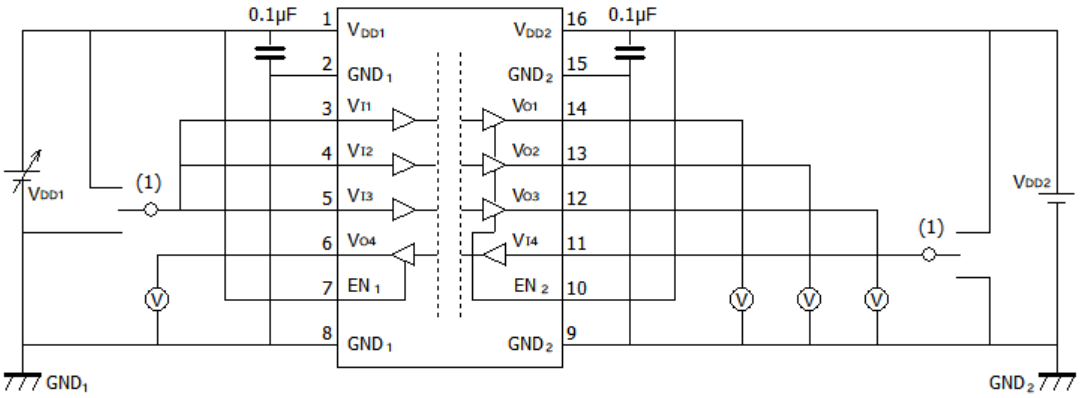

1: Default=L : V_{DD1} , Default=H : GND_1

Fig.12.1.3. DCL541L01/DCL541H01 V_{DD1UV+}/ V_{DD1UV-} Test Circuit

Downloaded from Arrow.com.

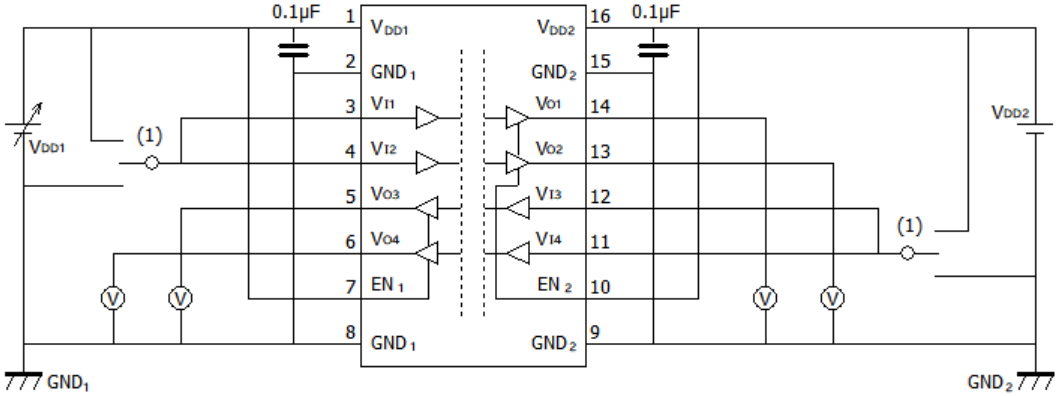

1: Default=L : V_{DD1} , Default=H : GND_1

Fig.12.1.4. DCL542L01/DCL542H01 V_{DD1UV+}/ V_{DD1UV-}Test Circuit

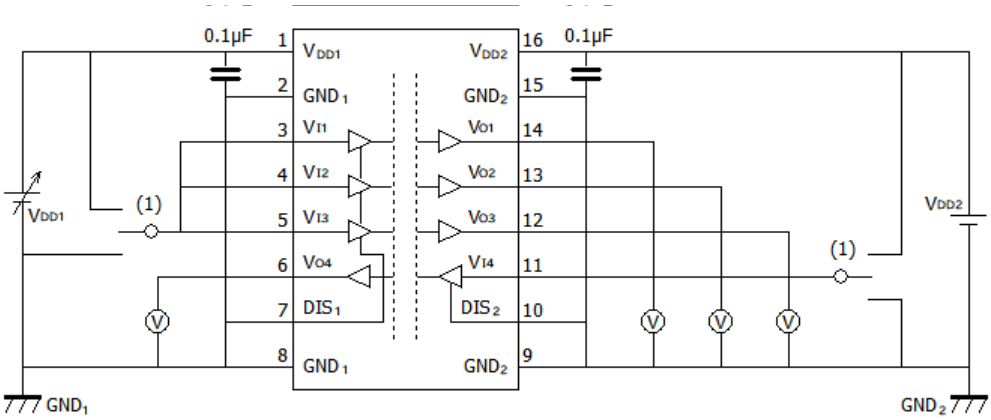

1: Default=L : V_{DD1} , Default=H : GND_1

Fig.12.1.5. DCL541A01/DCL541V01 V_{DD1UV+}/ V_{DD1UV-}Test Circuit

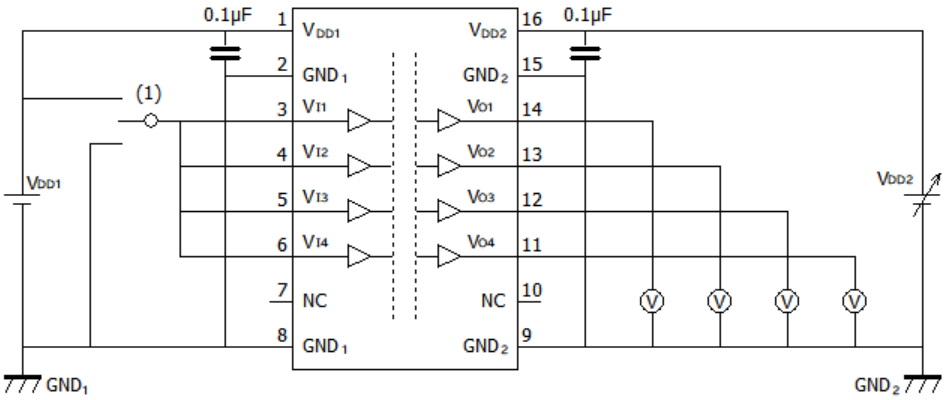

1: Default=L : V_{DD1} , Default=H : GND_1

Fig.12.1.6. DCL540C01/DCL540D01 V_{DD2UV+}/ V_{DD2UV-}Test Circuit

Downloaded from Arrow.com.

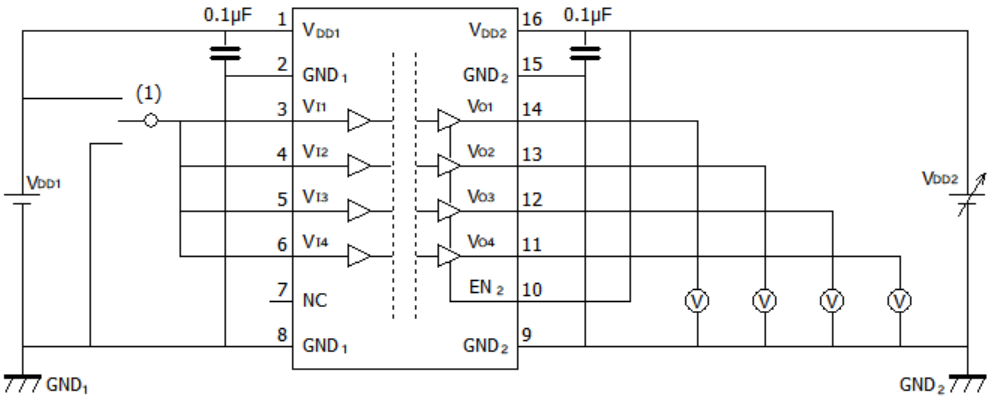

1: Default=L : V_{DD1} , Default=H : GND_1

Fig.12.1.7. DCL540L01/DCL540H01 V_{DD2UV+}/ V_{DD2UV-}Test Circuit

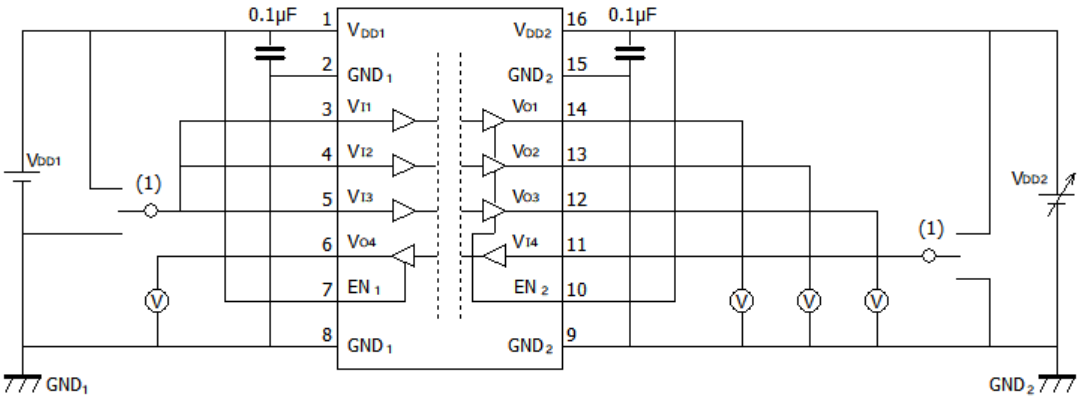

1: Default=L : V_{DDx} , Default=H : GNDx

Fig.12.1.8. DCL541L01/DCL541H01 V_{DD2UV+}/ V_{DD2UV-}Test Circuit

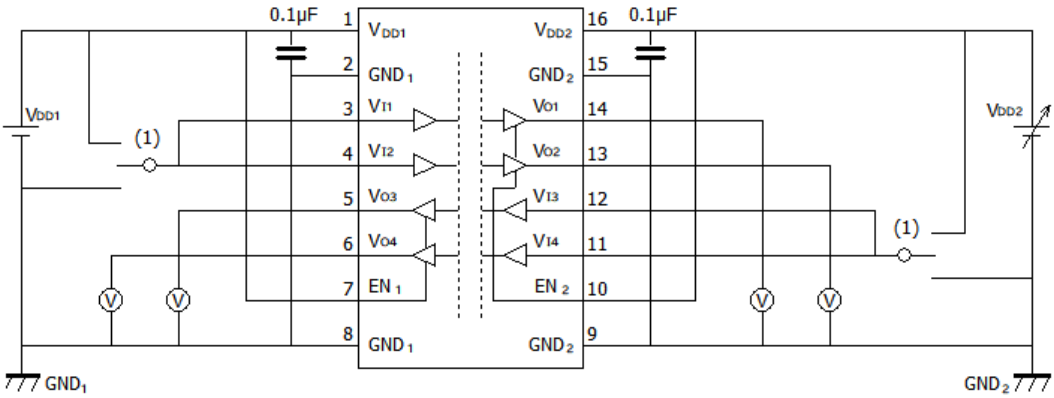

1: Default=L : V_{DDx} , Default=H : GNDx

Fig.12.1.9. DCL542L01/DCL542H01 V_{DD2UV+}/ V_{DD2UV-}Test Circuit

Downloaded from Arrow.com.

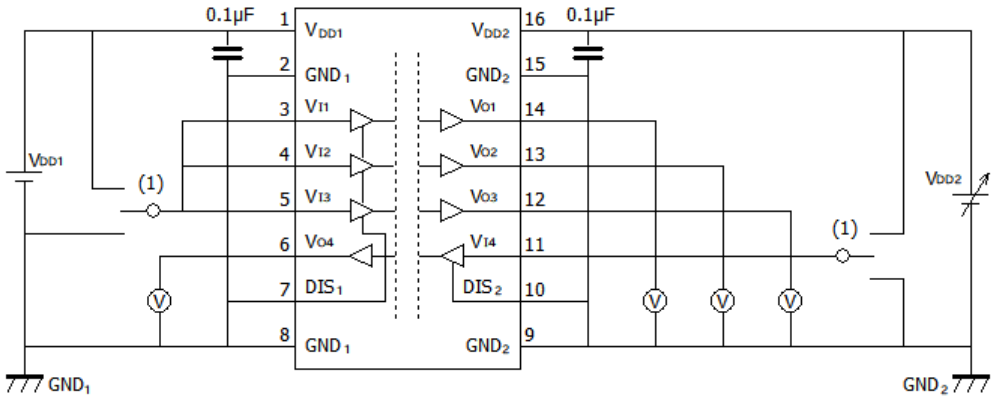

1: Default=L : V_{DDx} , Default=H : GNDx

Fig.12.1.10. DCL541A01/DCL541B01 V_{DD2UV+}/ V_{DD2UV-}Test Circuit

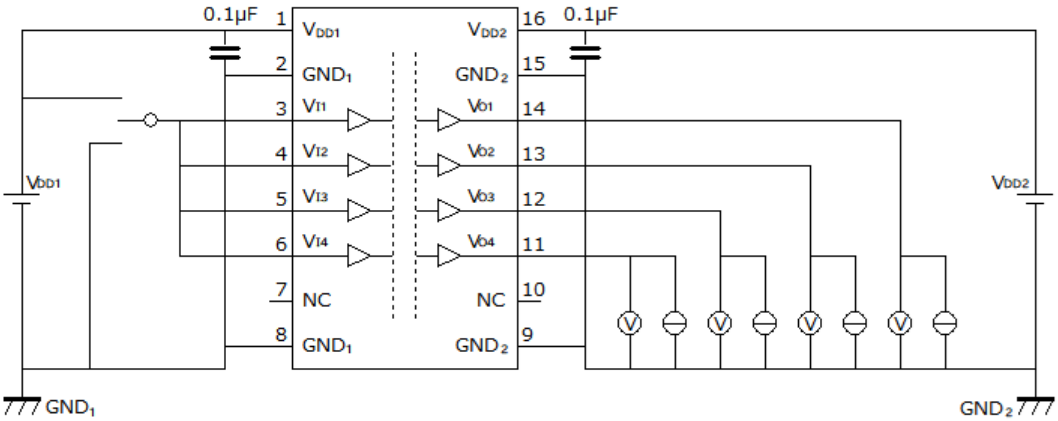

Fig.12.2.1. DCL540C01/DCL540D01 V_{OH}/V_{OL} Test Circuit

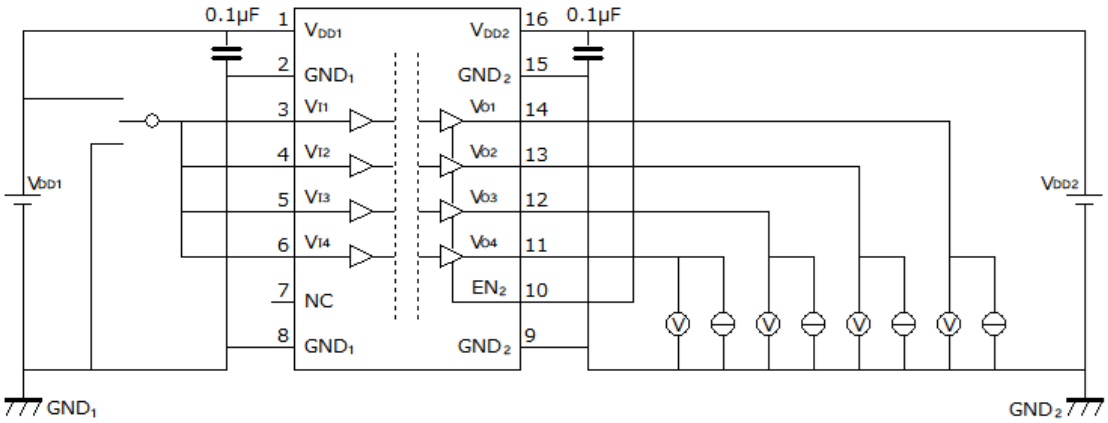

Fig.12.2.2. DCL540L01/DCL540H01 V_{OH}/V_{OL} Test Circuit

Downloaded from Arrow.com.

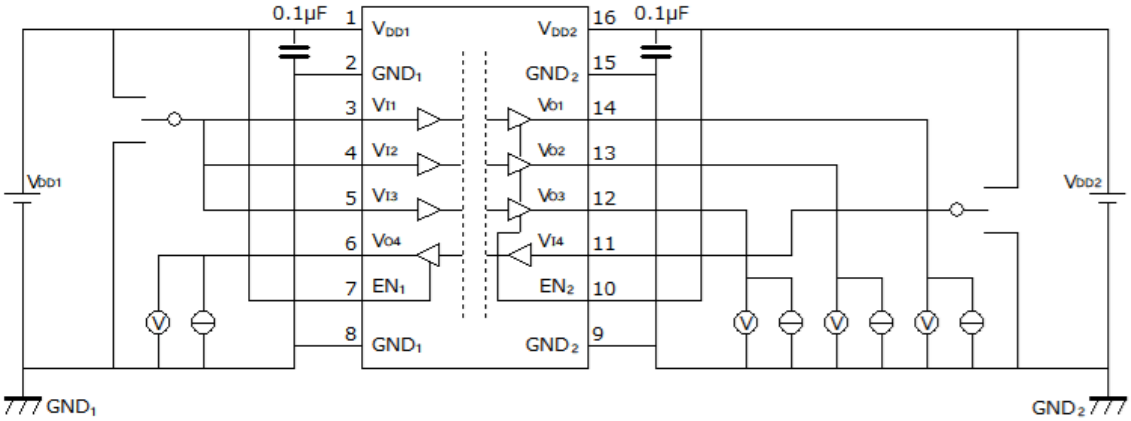

Fig.12.2.3. DCL541L01/DCL541H01 V_{OH}/V_{OL} Test Circuit

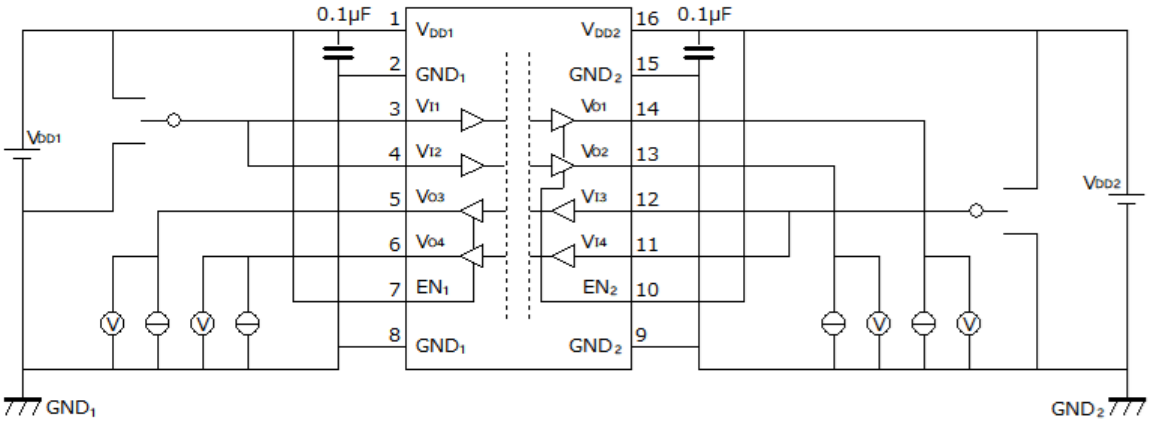

Fig.12.2.4. DCL542L01/DCL542H01 V_{OH}/V_{OL} Test Circuit

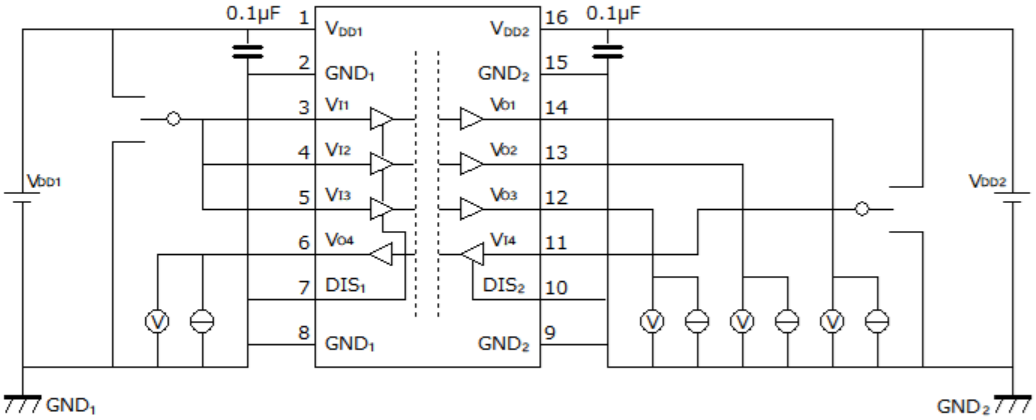

Fig.12.2.5. DCL541A01/DCL541B01 V_{OH}/V_{OL} Test Circuit

Downloaded from Arrow.com.

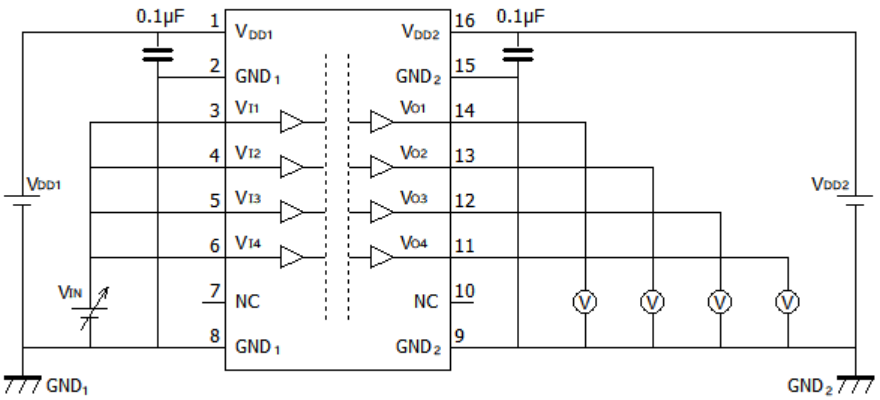

Fig.12.3.1. DCL540C01/DCL540D01 V_{IH}/V_{IL} Test Circuit

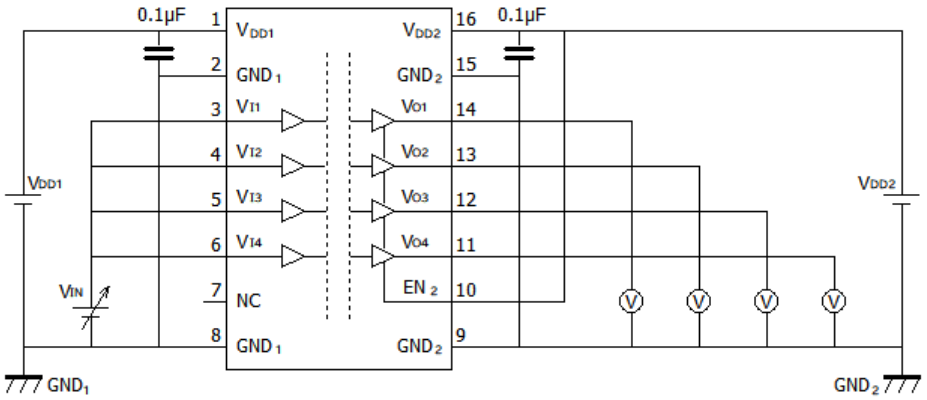

Fig.12.3.2. DCL540L01/DCL540H01 V_{IH}/V_{IL} Test Circuit

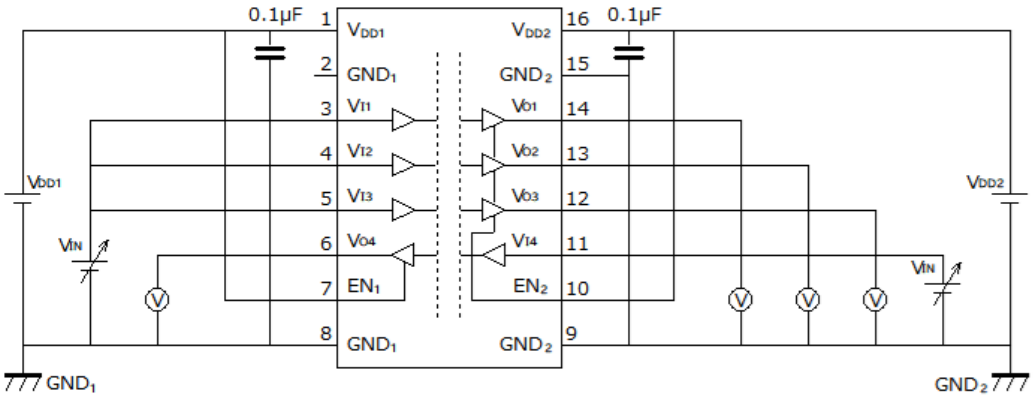

Fig.12.3.3. DCL541L01/DCL541H01 V_{IH}/V_{IL} Test Circuit

Downloaded from Arrow.com.

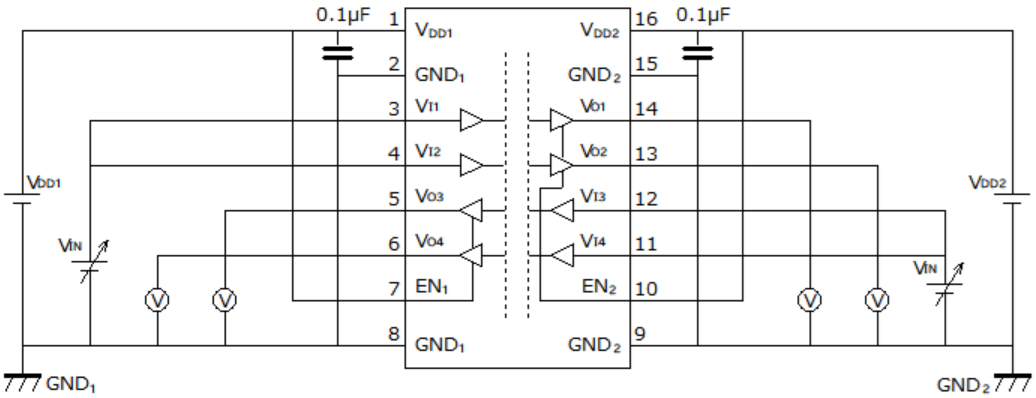

Fig.12.3.4. DCL542L01/DCL541B01 V_{IH}/V_{IL} Test Circuit

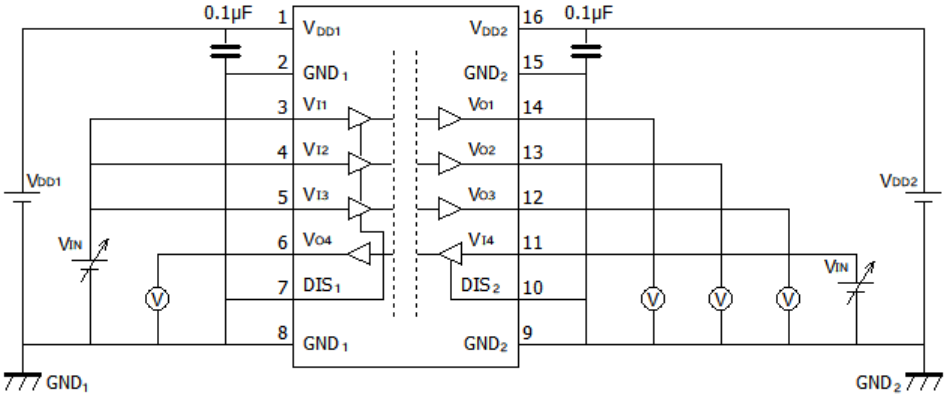

Fig.12.3.5. DCL541A01/DCL541B01 V_{IH}/V_{IL} Test Circuit

Downloaded from Arrow.com.

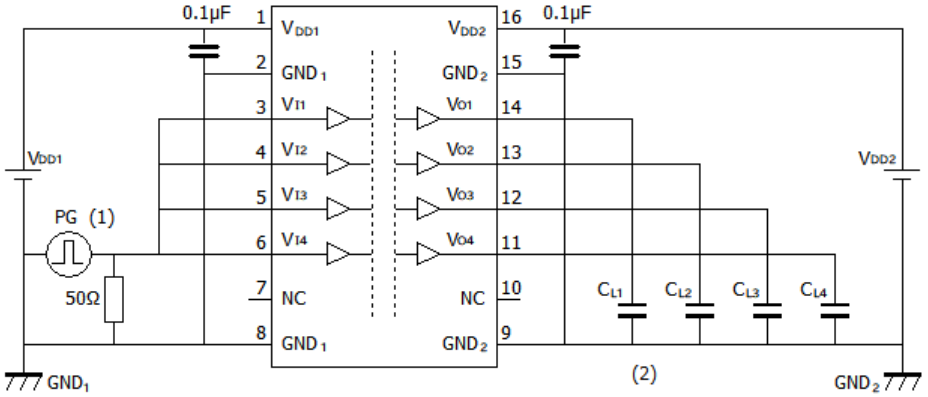

1: The input pulse is supplied by a generator having the following characteristics: PRR≤50 kHz, 50 % duty cycle, tr≤2 ns, tf≤2 ns, Z_O =50 Ω. At the input, 50 Ω resistor is required to terminate input generator signal. It is needed not in actual application.

2: C_{LX}=15 pF includes instrumentation and fixture capacitance.

Fig.12.4.1. DCL540C01/DCL540D01 Switching Test Circuit

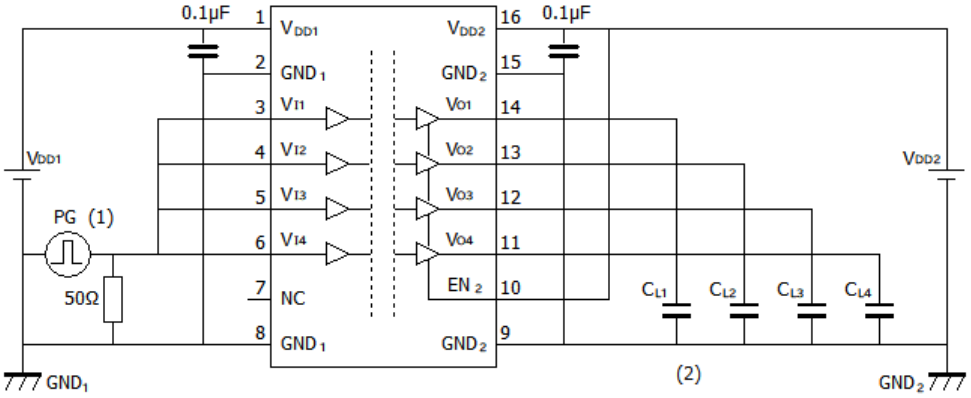

1: The input pulse is supplied by a generator having the following characteristics: PRR≤50 kHz, 50 % duty cycle, tr≤2 ns, tf≤2 ns, Z_O =50 Ω. At the input, 50 Ω resistor is required to terminate input generator signal. It is needed not in actual application.

2: C_{LX}=15 pF includes instrumentation and fixture capacitance.

Fig.12.4.2. DCL540L01/DCL540H01 Switching Test Circuit

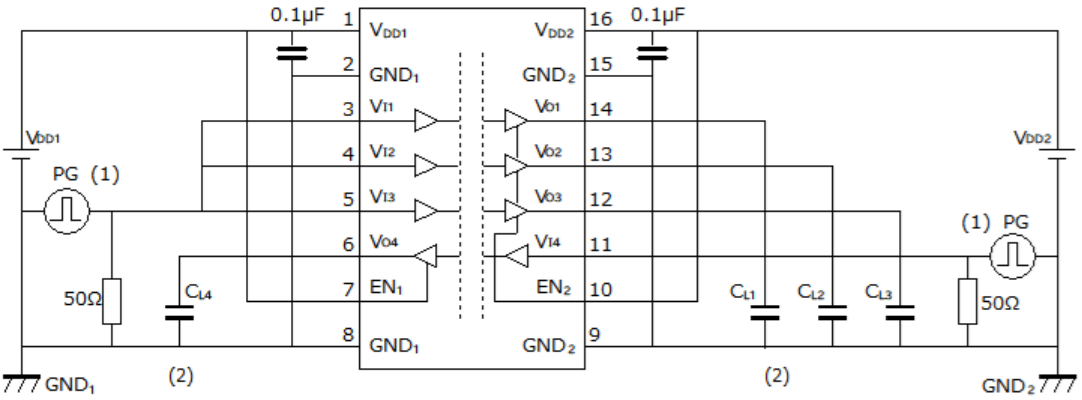

1: The input pulse is supplied by a generator having the following characteristics: PRR≤50 kHz, 50 % duty cycle, tr≤2 ns, tf≤2 ns, Z_O =50 Ω. At the input, 50 Ω resistor is required to terminate input generator signal. It is needed not in actual application.

2: C_{LX}=15 pF includes instrumentation and fixture capacitance.

Fig.12.4.3. DCL541L01/DCL541H01 Switching Test Circuit

Downloaded from Arrow.com.

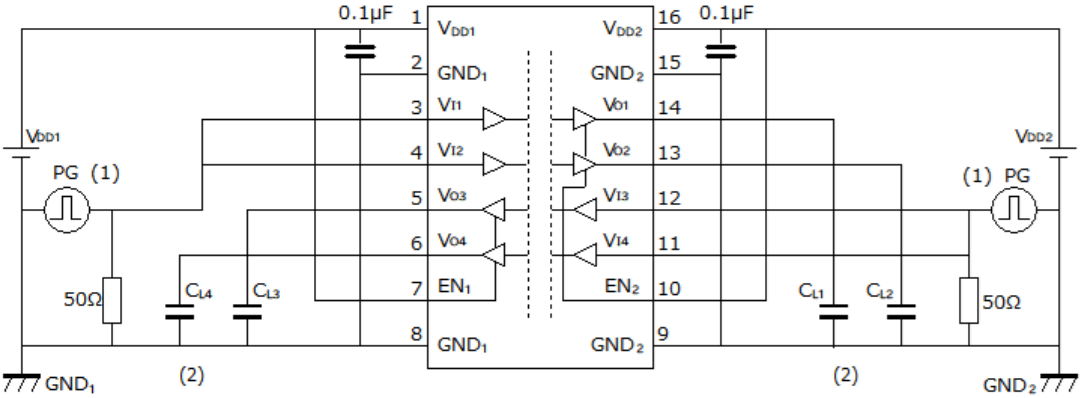

1: The input pulse is supplied by a generator having the following characteristics: PRR≤50 kHz, 50 % duty cycle, tr≤2 ns, tf≤2 ns, Z_O =50 Ω. At the input, 50 Ω resistor is required to terminate input generator signal. It is needed not in actual application.
2: C_{LX}=15 pF includes instrumentation and fixture capacitance.

Fig.12.4.4. DCL542L01/DCL542H01 Switching Test Circuit

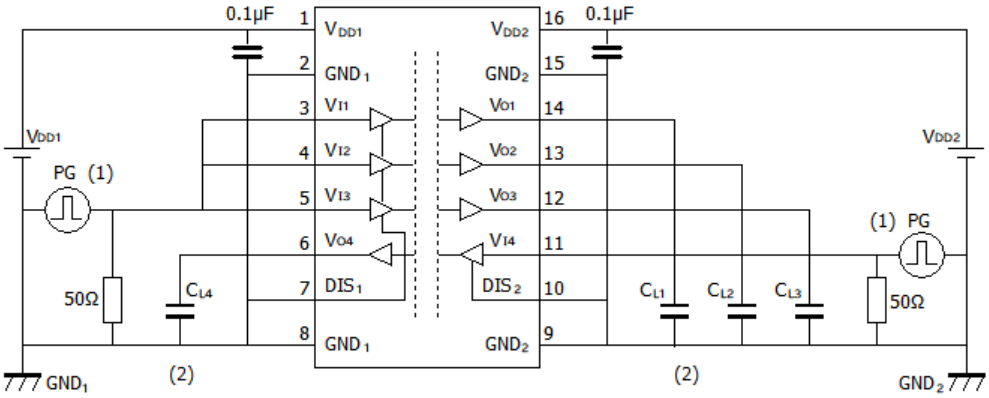

1: The input pulse is supplied by a generator having the following characteristics: PRR≤50 kHz, 50 % duty cycle, tr≤2 ns, tf≤2 ns, Z_O =50 Ω. At the input, 50 Ω resistor is required to terminate input generator signal. It is needed not in actual application.
2: C_{LX}=15 pF includes instrumentation and fixture capacitance.

Fig.12.4.5. DCL541A01/DCL541B01 Switching Test Circuit

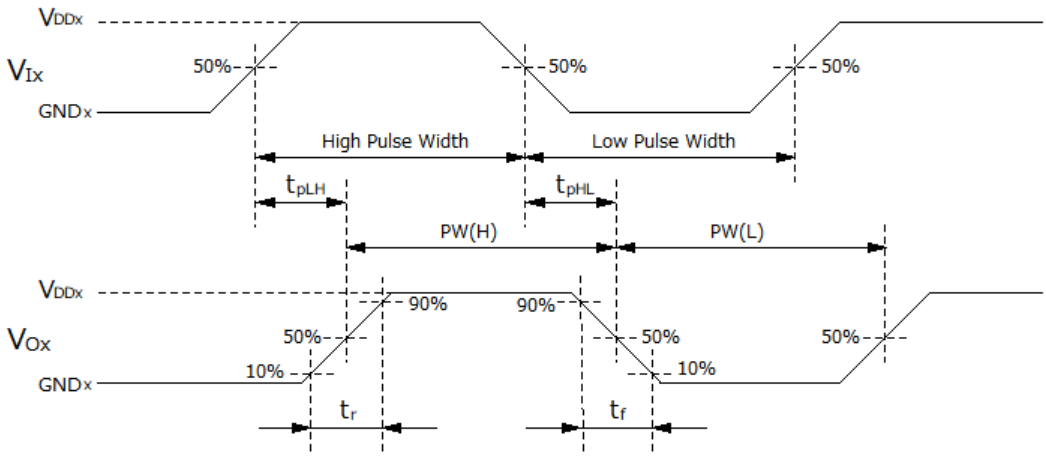

Fig.12.4.6. DCL5xxA01 Switching characteristic waveform diagram

Downloaded from Arrow.com.

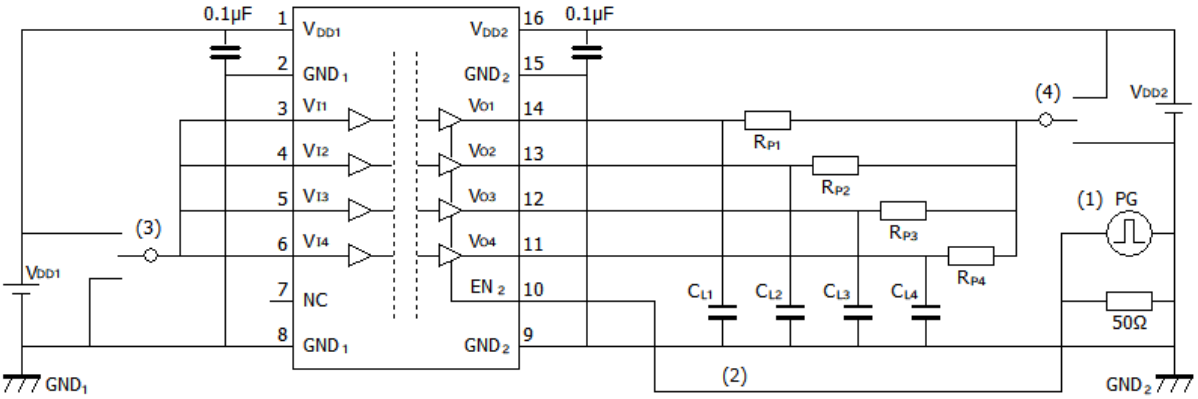

1: The input pulse is supplied by a generator having the following characteristics: PRR≤50 kHz, 50 % duty cycle, tr≤2 ns, tf≤2 ns, Z_O =50 Ω. At the input, 50 Ω resistor is required to terminate input generator signal. It is needed not in actual application.
2: C_{LX}=15 pF includes instrumentation and fixture capacitance.
3: GND for t_{pZL}, t_{pLZ}, V_{DD} for t_{pZH}, t_{pHZ}
4: V_{DD} for t_{pZL}, t_{pLZ}, GND for t_{pZH}, t_{pHZ}.

Fig.12.5.1. DCL540L01/ DCL540H01 Enable Propagation Delay Time Test Circuit

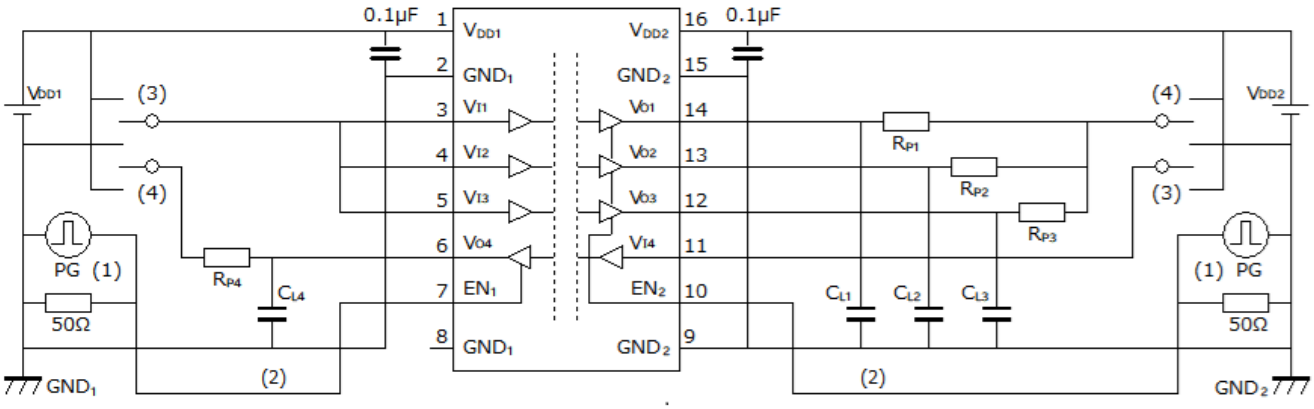

1: The input pulse is supplied by a generator having the following characteristics: PRR≤50 kHz, 50 % duty cycle, tr≤2 ns, tf≤2 ns, Z_O =50 Ω. At the input, 50 Ω resistor is required to terminate input generator signal. It is needed not in actual application.
2: C_{LX}=15 pF includes instrumentation and fixture capacitance.
3: GND for t_{pZL}, t_{pLZ}, V_{DD} for t_{pZH}, t_{pHZ}
4: V_{DD} for t_{pZL}, t_{pLZ}, GND for t_{pZH}, t_{pHZ}.

Fig.12.5.2. DCL541L01/ DCL541H01 Enable Propagation Delay Time Test Circuit

©2026
Toshiba Electronic Devices & Storage Corporation
Downloaded from Arrow.com.

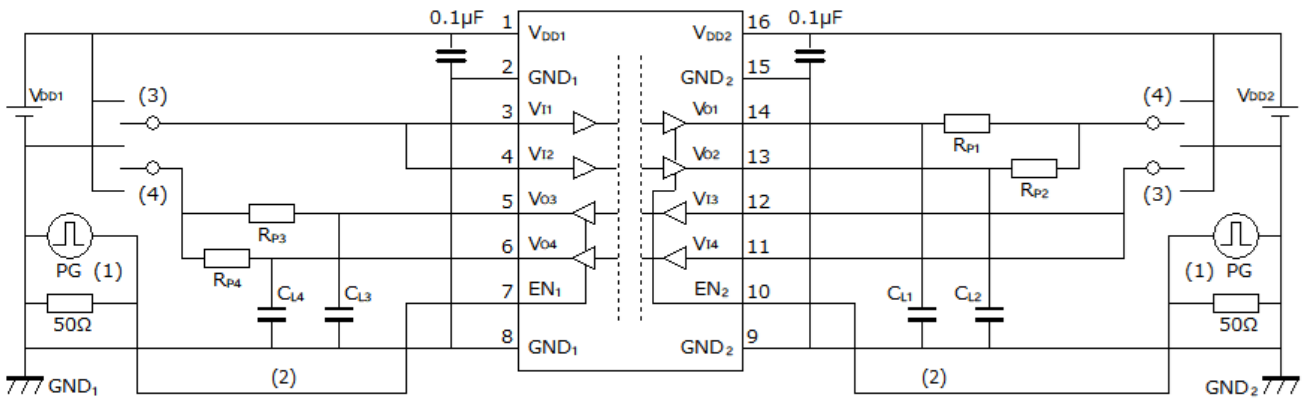

1: The input pulse is supplied by a generator having the following characteristics: PRR≤50 kHz, 50 % duty cycle, tr≤2 ns, tf≤2 ns, Z_O =50 Ω. At the input, 50 Ω resistor is required to terminate input generator signal. It is needed not in actual application.

2: C_{LX}=15 pF includes instrumentation and fixture capacitance.

3: GND for t_{pZL}, t_{pLZ}, V_{DD} for t_{pZH}, t_{pHZ}

4: V_{DD} for t_{pZL}, t_{pLZ}, GND for t_{pZH}, t_{pHZ}.

Fig.12.5.3. DCL541L02/ DCL542H01 Enable Propagation Delay Time Test Circuit

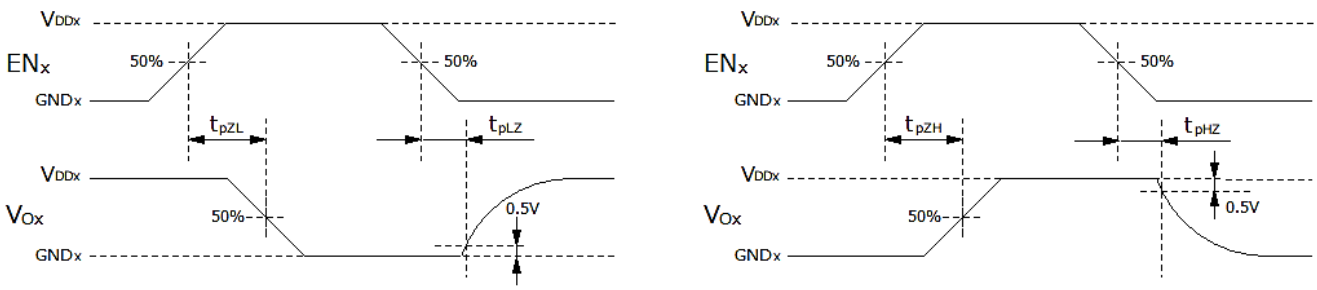

Fig.12.5.4. DCL54xL01/ DCL54xH01 Enable propagation delay time waveform

Downloaded from Arrow.com.

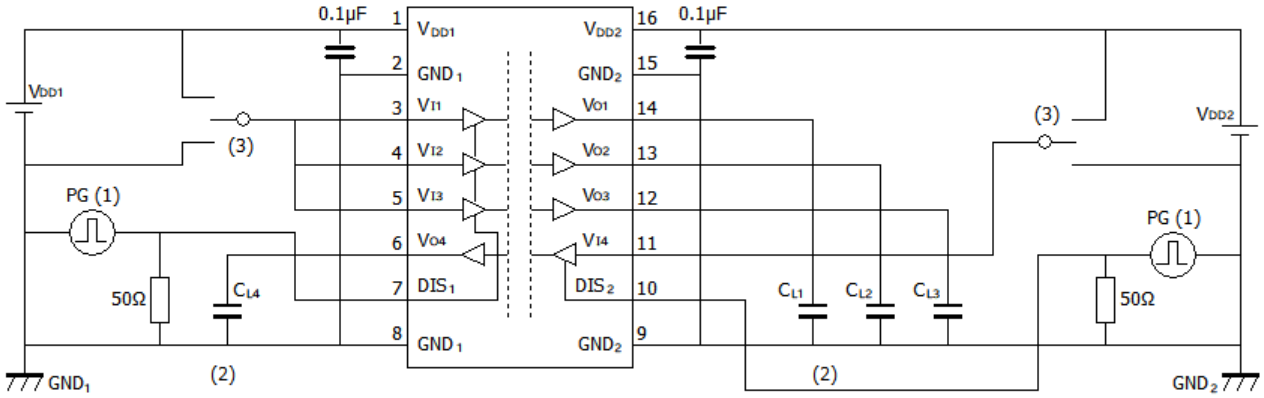

1: The input pulse is supplied by a generator having the following characteristics: PRR≤50 kHz, 50 % duty cycle, tr≤2 ns, tf≤2 ns, Z_O =50 Ω. At the input, 50 Ω resistor is required to terminate input generator signal. It is needed not in actual application.

2: C_{LX}=15 pF includes instrumentation and fixture capacitance.

3: GND for DCL541B01, V_{DD} for DCL541A01

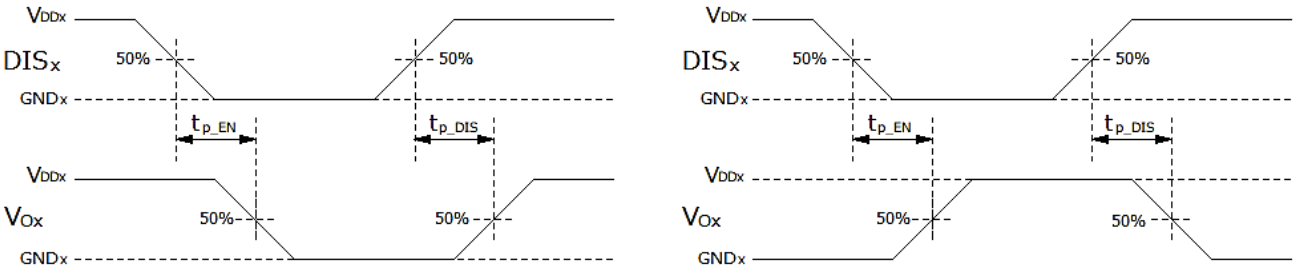

Fig.12.6. DCL541A01/DCL541B01 Disable Propagation Delay Time Test Circuit and Waveforms

Downloaded from Arrow.com.

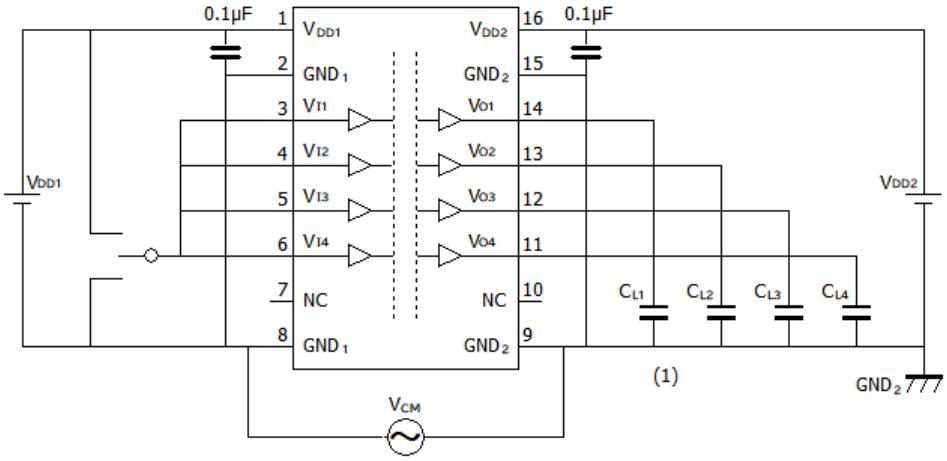

1: C_{LX}=15 pF includes instrumentation and fixture capacitance.

2: Apply V_{CM} with reference to the GND terminal on the output terminal side of the IC. The GND on the IC input terminal side is isolated from the output terminal side. Depending on which channel is being measured, V_{CM} may be applied with reference to GND_1 or with reference to GND_2.

Fig.12.7.1. DCL540C01/DCL540D01 Common-Mode Transient Immunity Test Circuit

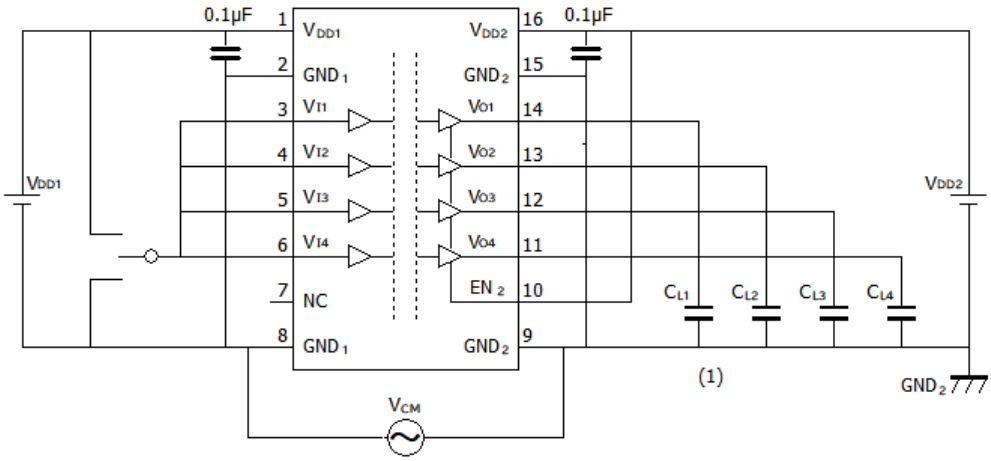

1: C_{LX}=15 pF includes instrumentation and fixture capacitance.

2: Apply V_{CM} with reference to the GND terminal on the output terminal side of the IC. The GND on the IC input terminal side is isolated from the output terminal side. Depending on which channel is being measured, V_{CM} may be applied with reference to GND_1 or with reference to GND_2.

Fig.12.7.2. DCL540L01/DCL540H01 Common-Mode Transient Immunity Test Circuit

Downloaded from Arrow.com.

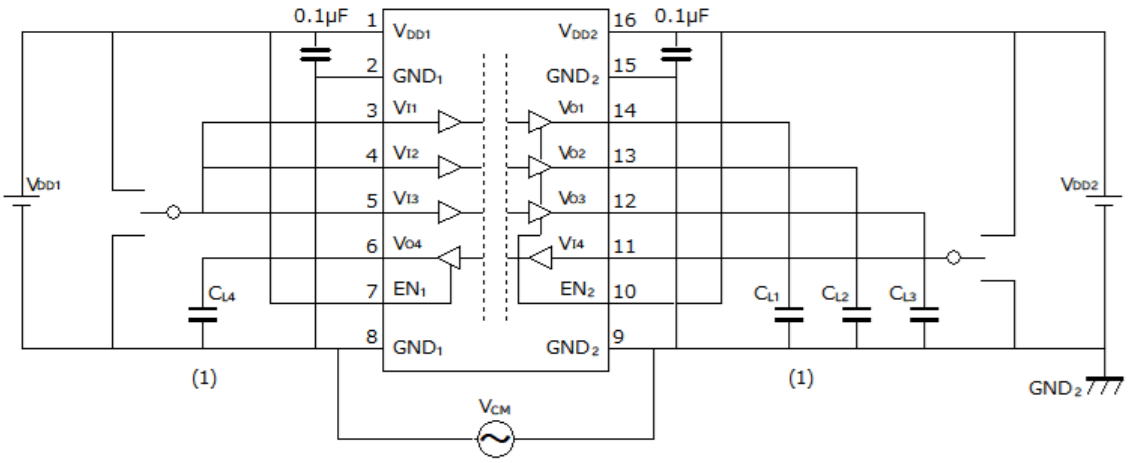

1: C_{LX}=15 pF includes instrumentation and fixture capacitance.

2: Apply V_{CM} with reference to the GND terminal on the output terminal side of the IC. The GND on the IC input terminal side is isolated from the output terminal side. Depending on which channel is being measured, V_{CM} may be applied with reference to GND_1 or with reference to GND_2.

Fig.12.7.3. DCL541L01/DCL541H01 Common-Mode Transient Immunity Test Circuit

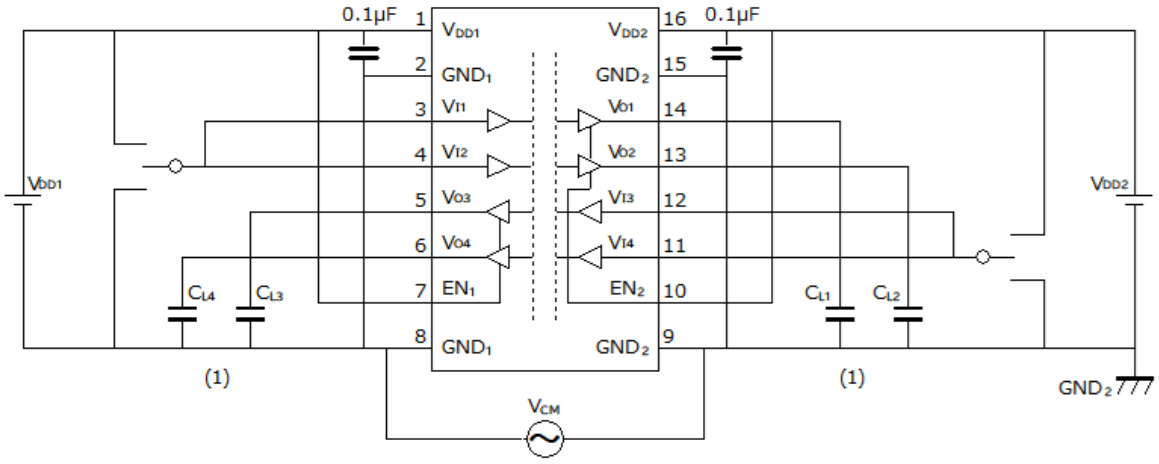

1: C_{LX}=15 pF includes instrumentation and fixture capacitance.

2: Apply V_{CM} with reference to the GND terminal on the output terminal side of the IC. The GND on the IC input terminal side is isolated from the output terminal side. Depending on which channel is being measured, V_{CM} may be applied with reference to GND_1 or with reference to GND_2.

Fig.12.7.4. DCL542L01/DCL542H01 Common-Mode Transient Immunity Test Circuit

Downloaded from Arrow.com.

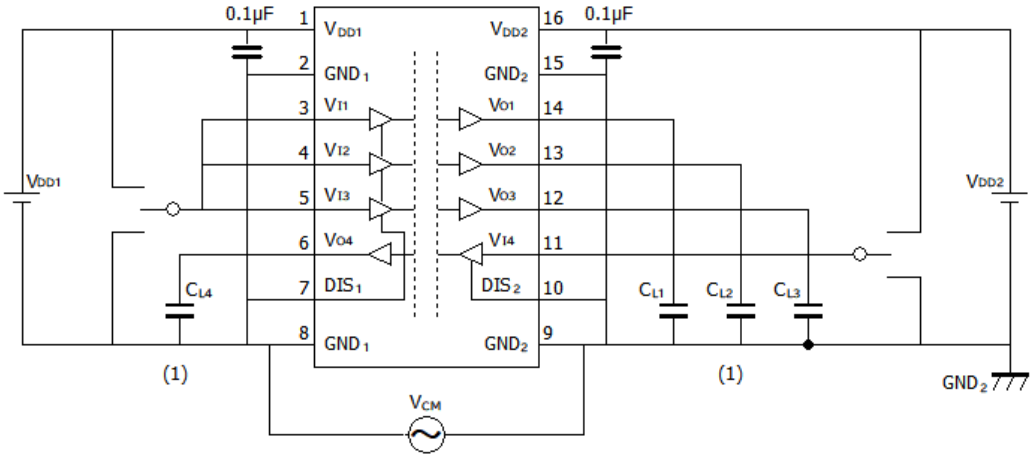

1: C_{LX}=15 pF includes instrumentation and fixture capacitance.

2: Apply V_{CM} with reference to the GND terminal on the output terminal side of the IC. The GND on the IC input terminal side is isolated from the output terminal side. Depending on which channel is being measured, V_{CM} may be applied with reference to GND_1 or with reference to GND_2.

Fig.12.7.5. DCL541A01/DCL541B01 Common-Mode Transient Immunity Test Circuit

Downloaded from Arrow.com.

13. Characteristics Curves (Note)

Note: The following characteristics curves are presented for reference only and not guaranteed by production test, unless otherwise noted.

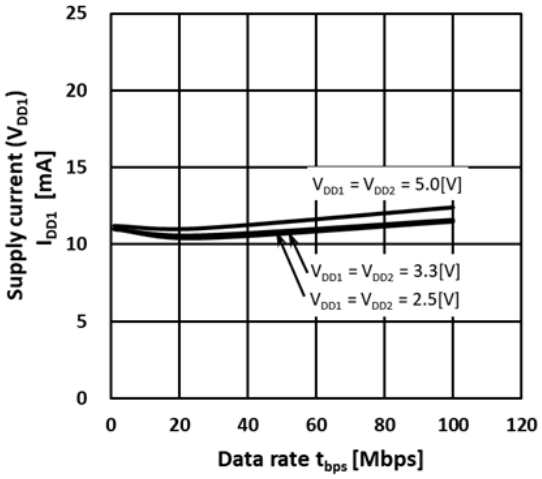

Fig.13.1. DCL540x01 I_{DD1} Supply Current - Data rate

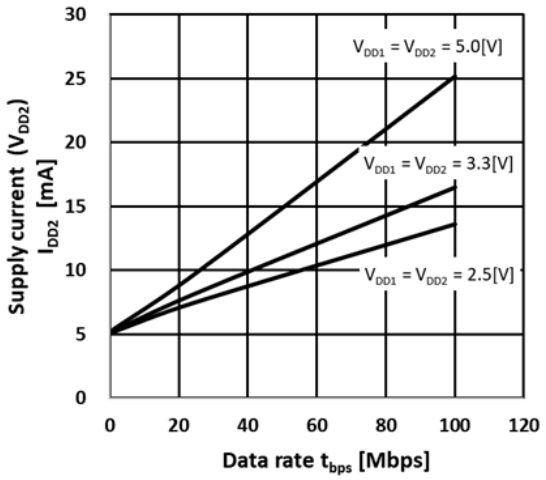

Fig.13.2. DCL540x01 I_{DD2} Supply Current - Data rate

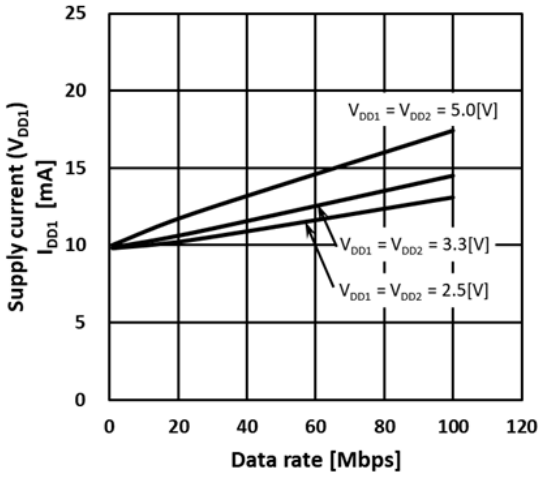

Fig.13.3. DCL541x01 I_{DD1} Supply Current - Data rate

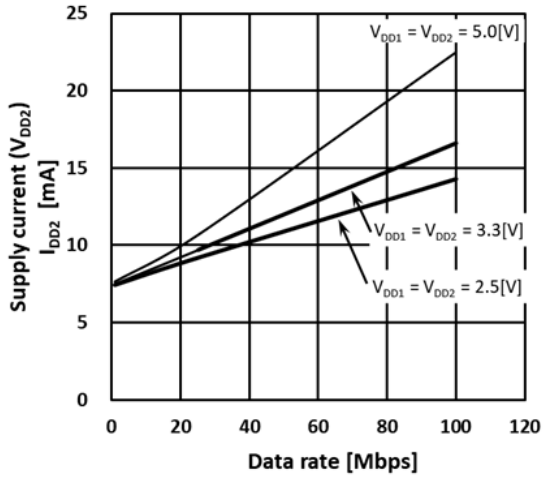

Fig.13.4. DCL5401x01 I_{DD2} Supply Current - Data rate

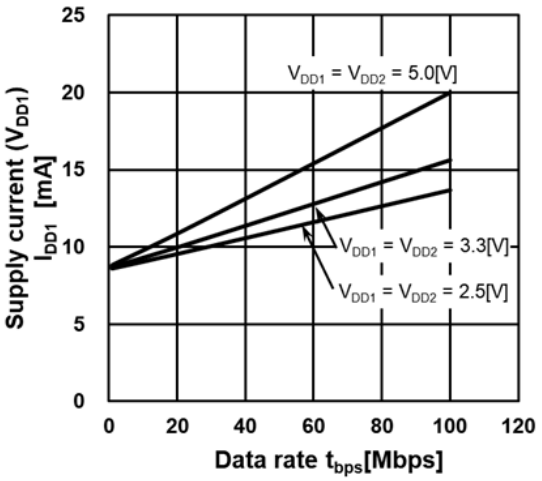

Fig.13.5. DCL542x01 I_{DD1} Supply Current - Data rate

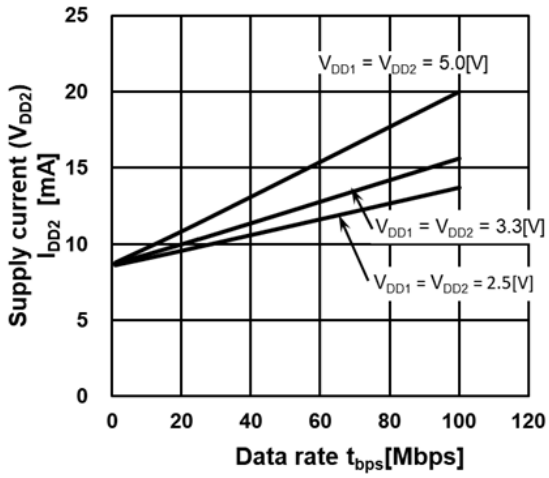

Fig.13.6. DCL542x01 I_{DD2} Supply Current - Data rate

Downloaded from Arrow.com.

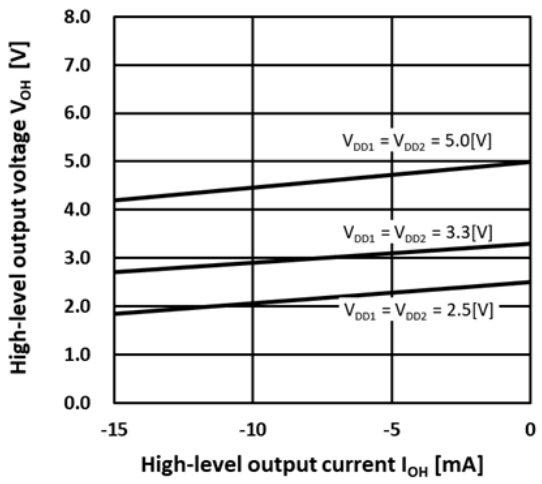

Fig.13.5. VOH - IOH

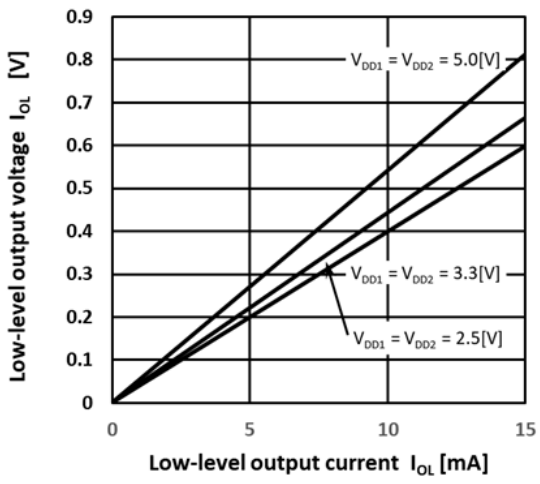

Fig.13.6. VOL – IOL

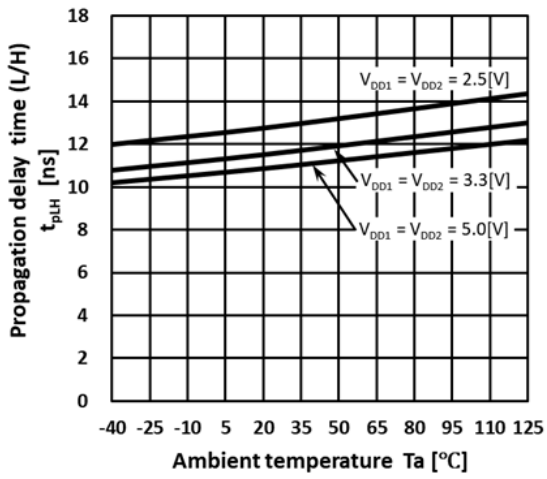

Fig.13.7. Propagation Delay Time t_{PHL} - Ta

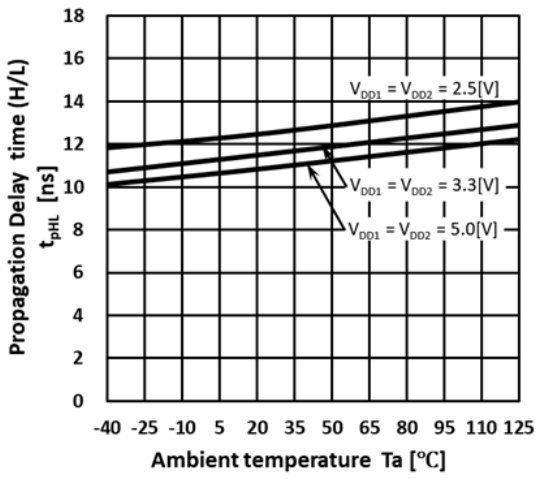

Fig.13.8. Propagation Delay Time t_{PLH} - Ta

Downloaded from Arrow.com.

14. Application Note

14.1. Eye diagram

The following figure shows typical eye diagrams of DCL541xx01 at the maximum data rate of 150Mbps with pseudorandom bit sequences (PRBS), supply voltage 3.3 V for reference only.

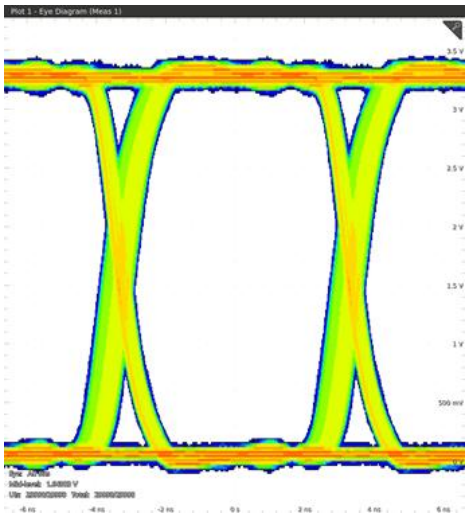

Fig.14.1 DCL541A01 Eye diagram at 150Mbps

14.2. PCB layout

A ceramic capacitor (0.1 μF) should be connected between pin 1 (V_{DD1}) and pin 2 (GND_1) for V_{DD1} and between pin 16 (V_{DD2}) and pin 15 (GND_2) for V_{DD2}, and it should be the layout on the IC as close as possible (less than 10mm). Otherwise, the IC may not operate properly.

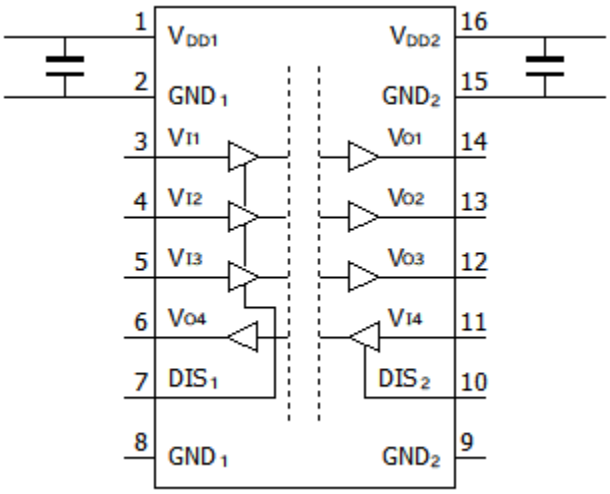

Fig.14.2 Recommended Printed Circuit Board Layout

Downloaded from Arrow.com.

15. Package Information

Implementation category	Surface Mount
Pin Number	16
Weight (g)	0.426 (Typical)
Package Dimension Width × Length × Height (mm)	10.3 × 10.0 × 2.45 (Typical)
Package Dimension (mm) / Land Pattern Example (mm)	Package Dimension 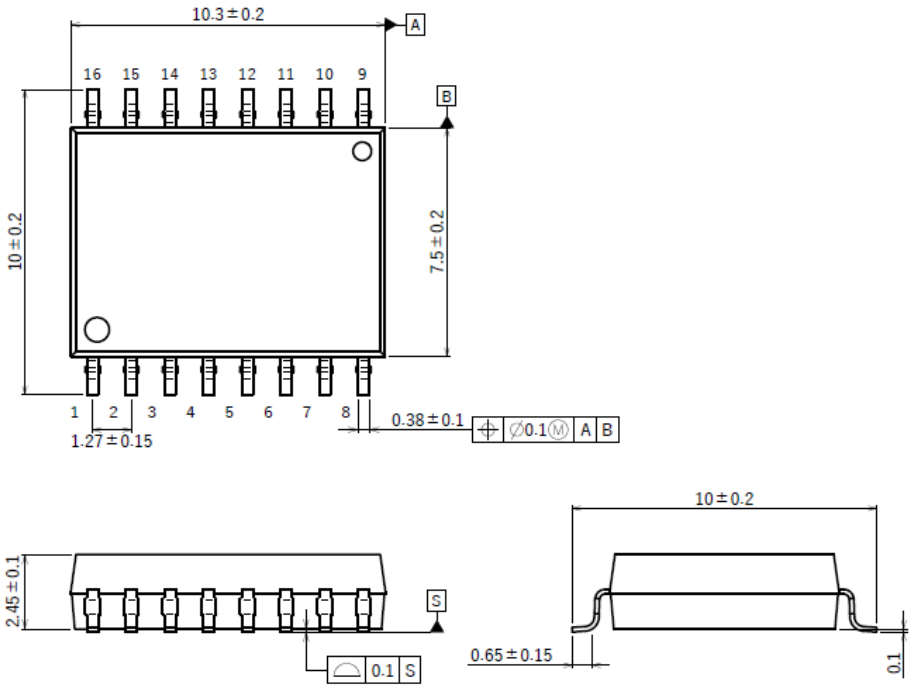 Land Pattern Dimensions (for reference only) 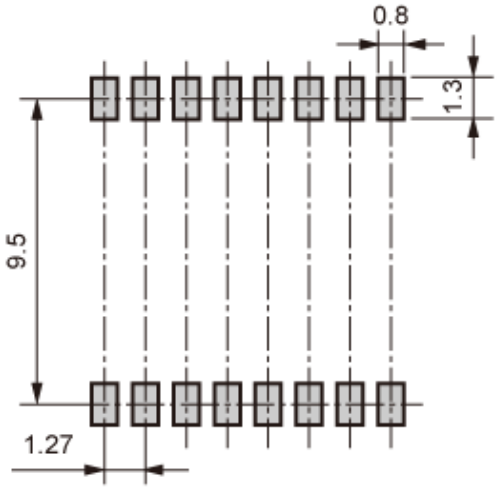

Downloaded from Arrow.com.

RESTRICTIONS ON PRODUCT USE

Toshiba Corporation and its subsidiaries and affiliates are collectively referred to as “TOSHIBA”. Hardware, software and systems described in this document are collectively referred to as “Product”.

- TOSHIBA reserves the right to make changes to the information in this document and related Product without notice.
- This document and any information herein may not be reproduced without prior written permission from TOSHIBA. Even with TOSHIBA's written permission, reproduction is permissible only if reproduction is without alteration/omission.
- Though TOSHIBA works continually to improve Product's quality and reliability, Product can malfunction or fail. Customers are responsible for complying with safety standards and for providing adequate designs and safeguards for their hardware, software and systems which minimize risk and avoid situations in which a malfunction or failure of Product could cause loss of human life, bodily injury or damage to property, including data loss or corruption. Before customers use the Product, create designs including the Product, or incorporate the Product into their own applications, customers must also refer to and comply with (a) the latest versions of all relevant TOSHIBA information, including without limitation, this document, the specifications, the data sheets and application notes for Product and the precautions and conditions set forth in the "TOSHIBA Semiconductor Reliability Handbook" and (b) the instructions for the application with which the Product will be used with or for. Customers are solely responsible for all aspects of their own product design or applications, including but not limited to (a) determining the appropriateness of the use of this Product in such design or applications; (b) evaluating and determining the applicability of any information contained in this document, or in charts, diagrams, programs, algorithms, sample application circuits, or any other referenced documents; and (c) validating all operating parameters for such designs and applications. **TOSHIBA ASSUMES NO LIABILITY FOR CUSTOMERS' PRODUCT DESIGN OR APPLICATIONS.**
- **PRODUCT IS NEITHER INTENDED NOR WARRANTED FOR USE IN EQUIPMENTS OR SYSTEMS THAT REQUIRE EXTRAORDINARILY HIGH LEVELS OF QUALITY AND/OR RELIABILITY, AND/OR A MALFUNCTION OR FAILURE OF WHICH MAY CAUSE LOSS OF HUMAN LIFE, BODILY INJURY, SERIOUS PROPERTY DAMAGE AND/OR SERIOUS PUBLIC IMPACT ("UNINTENDED USE").** Except for specific applications as expressly stated in this document, Unintended Use includes, without limitation, equipment used in nuclear facilities, equipment used in the aerospace industry, Class 3 medical devices, equipment used for automobiles, and military vehicles and munitions. IF YOU USE PRODUCT FOR UNINTENDED USE, TOSHIBA ASSUMES NO LIABILITY FOR PRODUCT. For details, please contact your TOSHIBA sales representative or contact us via our website.
- Do not disassemble, analyze, reverse-engineer, alter, modify, translate or copy Product, whether in whole or in part.
- Product shall not be used for or incorporated into any products or systems whose manufacture, use, or sale is prohibited under any applicable laws or regulations.
- The information contained herein is presented only as guidance for Product use. No responsibility is assumed by TOSHIBA for any infringement of patents or any other intellectual property rights of third parties that may result from the use of Product. No license to any intellectual property right is granted by this document, whether express or implied, by estoppel or otherwise.
- **ABSENT A WRITTEN SIGNED AGREEMENT, EXCEPT AS PROVIDED IN THE RELEVANT TERMS AND CONDITIONS OF SALE FOR PRODUCT, AND TO THE MAXIMUM EXTENT ALLOWABLE BY LAW, TOSHIBA (1) ASSUMES NO LIABILITY WHATSOEVER, INCLUDING WITHOUT LIMITATION, INDIRECT, CONSEQUENTIAL, SPECIAL, OR INCIDENTAL DAMAGES OR LOSS, INCLUDING WITHOUT LIMITATION, LOSS OF PROFITS, LOSS OF OPPORTUNITIES, BUSINESS INTERRUPTION AND LOSS OF DATA, AND (2) DISCLAIMS ANY AND ALL EXPRESS OR IMPLIED WARRANTIES AND CONDITIONS RELATED TO SALE, USE OF PRODUCT, OR INFORMATION, INCLUDING WARRANTIES OR CONDITIONS OF MERCHANTABILITY, FITNESS FOR A PARTICULAR PURPOSE, ACCURACY OF INFORMATION, OR NONINFRINGEMENT.**
- Do not use or otherwise make available Product or related software or technology for any military purposes, including without limitation, for the design, development, use, stockpiling or manufacturing of nuclear, chemical, or biological weapons or missile technology products (mass destruction weapons). Product and related software and technology may be controlled under the applicable export laws and regulations including, without limitation, the Japanese Foreign Exchange and Foreign Trade Law and the U.S. Export Administration Regulations. Export and re-export of Product or related software or technology are strictly prohibited except in compliance with all applicable export laws and regulations.
- Please contact your TOSHIBA sales representative for details as to environmental matters such as the RoHS compatibility of Product. Please use Product in compliance with all applicable laws and regulations that regulate the inclusion or use of controlled substances, including without limitation, the EU RoHS Directive. **TOSHIBA ASSUMES NO LIABILITY FOR DAMAGES OR LOSSES OCCURRING AS A RESULT OF NONCOMPLIANCE WITH APPLICABLE LAWS AND REGULATIONS.**

Toshiba Electronic Devices & Storage Corporation
https://toshiba.semicon-storage.com/

©2026
Toshiba Electronic Devices & Storage Corporation

Downloaded from Arrow.com.