CUI Devices is now Same Sky! Learn More

same sky

MODEL: SLW-91353-2A-RA-D | DESCRIPTION: SLIDE SWITCH

FEATURES

- through hole
- right angle
- raised slide actuator

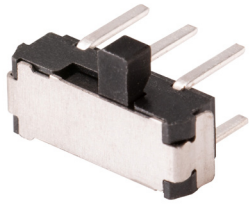

RoHS

SPECIFICATIONS

parameter	conditions/description	min	typ	max	units
rated voltage				12	Vdc
rated current				100	mA
withstanding voltage	for 1 minute		250		Vac
contact resistance	measured at 1 kHz at 100 mA or less			100	mΩ
insulation resistance	at 100 Vdc for 1 minute	100			MΩ
operating force		100	200	300	gf
actuator travel		1.6	2	2.4	mm
operating temperature		-20		70	°C
storage temperature		-40		90	°C
life	at uniform rate of 15~18 cycles per minute, no load		10,000		cycles
vibration	10~55~10 Hz, 1.5 mm amplitude, 2 hours on each XYZ				
flammability rating	see material table				
RoHS	yes				

SOLDERABILITY

parameter	conditions/description	min	typ	max	units
hand soldering	for max 3 seconds			350	°C
wave soldering	for max 5 seconds			260	°C

Downloaded from Arrow.com.

MECHANICAL DRAWING

units: mm
tolerance: ±0.20 mm
unless otherwise specified

DESCRIPTION	MATERIAL	PLATING/COLOR
base	PA6T	black
terminal	phosphorus copper	silver
contact	berylium bronze	silver
knob	PA6T	black
frame	SUS	

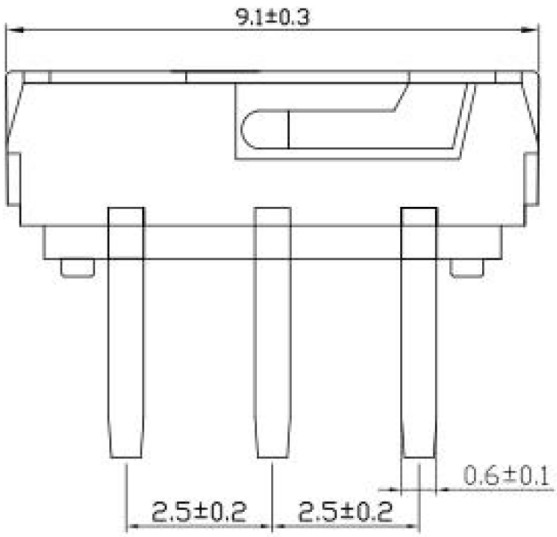

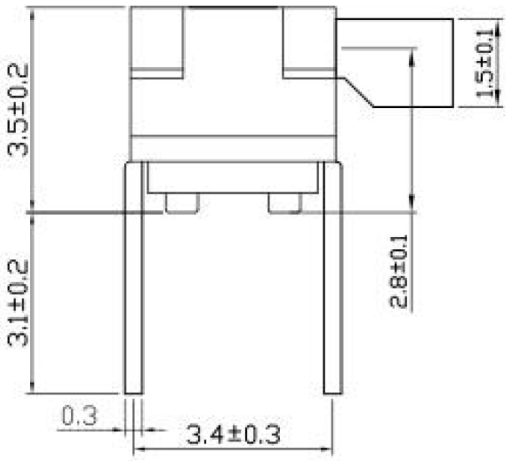

SCHEMATIC

DPDT (NON-SHORTING)

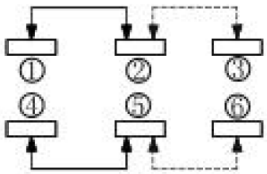

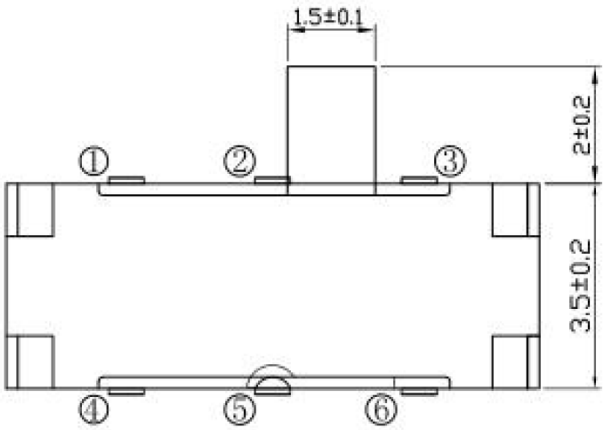

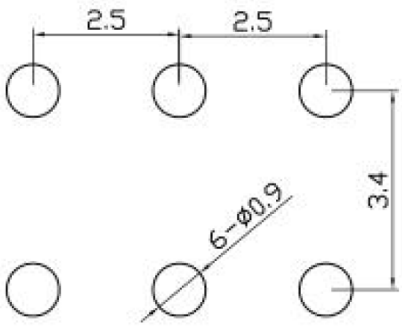

Recommended PCB Layout
Top View

Downloaded from Arrow.com.

REVISION HISTORY

rev.	description	date
1.0	initial release	07/07/2023
1.01	CUI Devices rebranded to Same Sky	09/12/2024

The revision history provided is for informational purposes only and is believed to be accurate.

Same Sky offers a one (1) year limited warranty. Complete warranty information is listed on our website.

Same Sky reserves the right to make changes to the product at any time without notice. Information provided by Same Sky is believed to be accurate and reliable. However, no responsibility is assumed by Same Sky for its use, nor for any infringements of patents or other rights of third parties which may result from its use.

Same Sky products are not authorized or warranted for use as critical components in equipment that requires an extremely high level of reliability. A critical component is any component of a life support device or system whose failure to perform can be reasonably expected to cause the failure of the life support device or system, or to affect its safety or effectiveness.

Downloaded from Arrow.com.