Part Number : 19092019
Product Description : 2.36mm Diameter Standard .093" Pin and Socket Plug Housing with Positive Latch, UL 94V-2, without Panel Mount, 1 Circuit
Series Number : 3191
Status : Active
Product Category : Connector Housings
Engineering Part Number : 3191-1P1

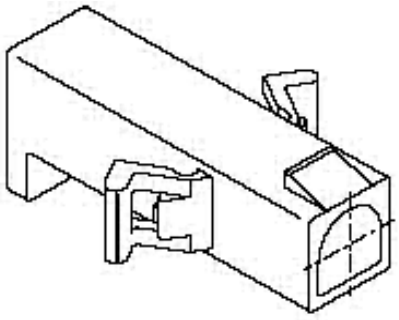

Documents and Resources

Drawings

019092019_sd.pdf

PK-3191-001-001.pdf

3D Models and Design Files

STEP AP242

SOLIDWORKS

Creo

Specifications

31910002-PK-000.pdf

PS-3191-001-001.pdf

Product Environment Compliance

Compliance

GADSL/IMDS	Not Relevant
China RoHS	per SJ/T 11365-2006
EU ELV	Not Relevant
Low-Halogen Status	Low-Halogen per IEC 61249-2-21
REACH SVHC	Not Contained per D(2025)7771-DC (04 Feb 2026)
EU RoHS	Compliant per EU 2015/863

Downloaded from Arrow.com.

Compliance Statements

- EU RoHS
- REACH SVHC
- Low-Halogen

Industry Documents

- IPC 1752A Class C
- IPC 1752A Class D
- Molex Product Compliance Declaration
- IEC-62474
- chemSHERPA (xml)

Substances of Interest

- PFAS

EU RoHS Certificate of Compliance

Additional Product Compliance Information

Part Details

General

Status	Active
Category	Connector Housings
Series	3191
Description	2.36mm Diameter Standard .093" Pin and Socket Plug Housing with Positive Latch, UL 94V-2, without Panel Mount, 1 Circuit
Application	Power, Wire-to-Wire
Comments	Polarized to Mating Part, without Mounting Ears
Product Name	Standard .093"
UPC	800753594128

Agency

CSA	LR19980
UL	E29179

Physical

Circuits (maximum)	1
Color - Resin	Natural
Flammability	94V-2

Downloaded from Arrow.com.

Gender	Plug
Glow-Wire Capable	No
Keying to Mating Part	No
Lock to Mating Part	Yes
Material - Resin	Nylon
Net Weight	1.655/g
Number of Rows	1
Packaging Type	Bag
Panel Mount	No
Pitch - Mating Interface	N/A
Polarized to Mating Part	Yes
Stackable	No
Temperature Range - Operating	-40° to +105°C

Solder Process Data

Lead-Free Process Capability	N/A

Mates With / Use With

Mates with Part(s)

Description	Part Number
2.36mm Diameter Standard .093" Pin and Socket Receptacle Housing with Positive Latch, UL 94V-0, 1 Circuit	19091016
2.36mm Diameter Standard .093" Pin and Socket Receptacle Housing with Positive Latch, UL 94V-2, 1 Circuit	19091019

Use with Part(s)

Description	Part Number
Standard .093" Pin and Socket Female Crimp Terminals	1189
Standard .093" Pin and Socket Female Crimp Terminals	1381
Standard .093" Pin and Socket	4550

Downloaded from Arrow.com.

Female Crimp Terminal	
Standard .093" Pin and Socket Male Crimp Terminals	1190
Standard .093" Pin and Socket Male Crimp Terminals	1380
Standard .093" Pin and Socket Male Crimp Terminal	1434
Standard .093" Pin and Socket Male Crimp Grounding Terminals	1973
2.36mm Diameter, Standard .093" Pin and Socket Male Crimp Terminals	42138

Downloaded from Arrow.com.