Alle Rechte vorbehalten/ *All rights reserved*

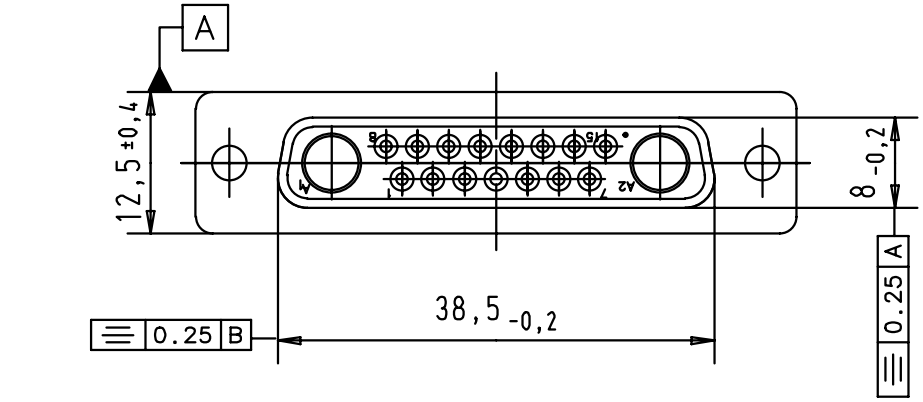

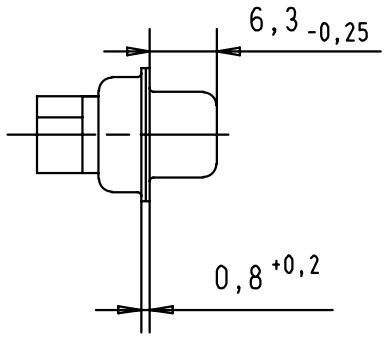

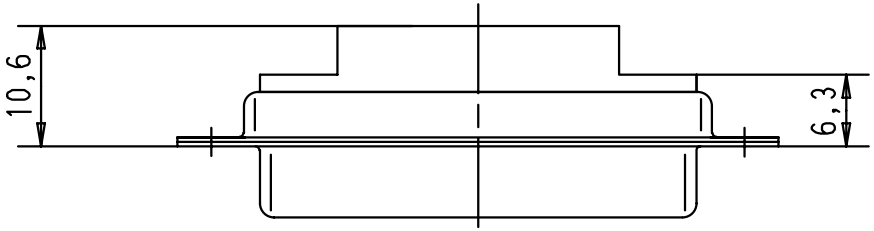

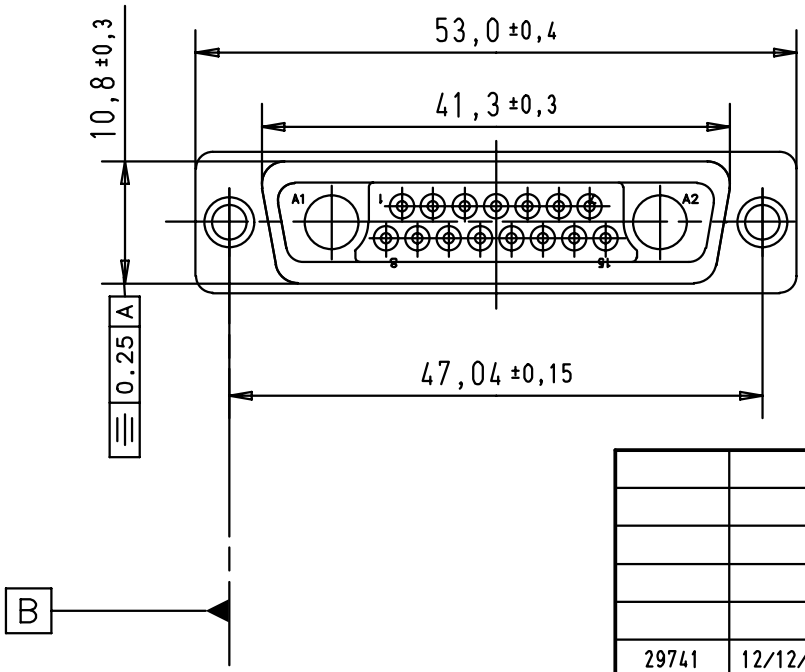

				Dat.	Name
			Detail.	12/12/01	S.H.
			Insp.		
			Stand.		
29741	12/12/01	S.H.			
Mod.	Dat.	Name			

All Dim. in mm
Orig. Size DIN A 4

D-Sub , female, straight
17W2, without contact,
Tin plated shell

Maßstab/ *Scale* 1.5/1

HARTING ELEKTRONIK
F-95972 Paris

TB 09 69 302 0172

Sub.

Blatt/ *Page*

Downloaded from Arrow.com.