Data Sheet | Item Number: 215-111

Banana plug; for socket 4 mm Ø; color mixed; 10 x each - orange, white, black, blue, yellow; 2,50 mm²; orange

https://www.wago.com/215-111

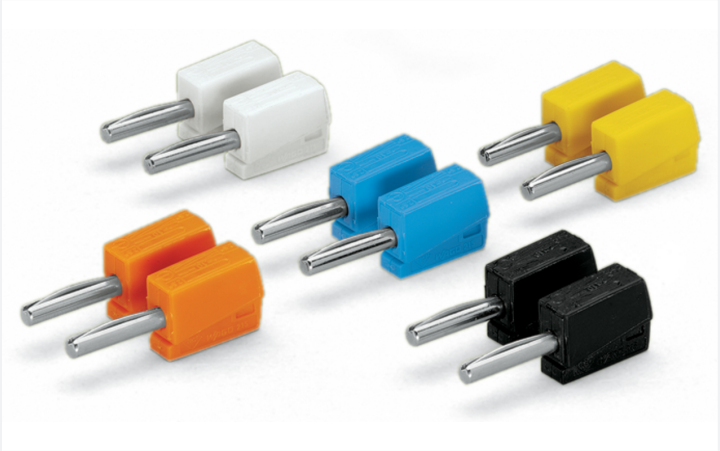

Color: orange

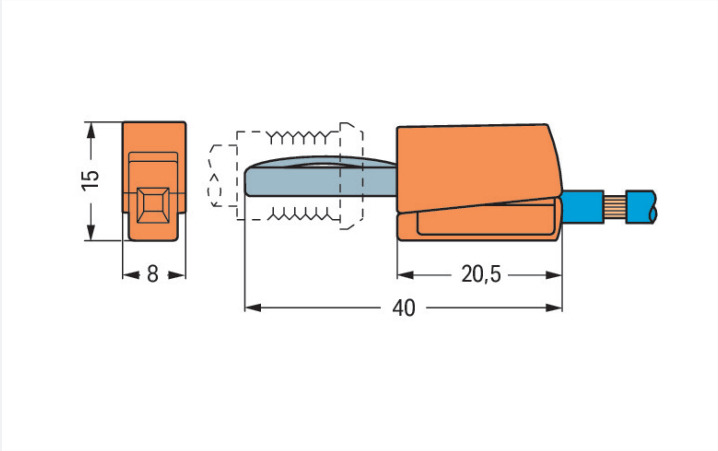

Dimensions in mm

Technical data	
Total number of potentials	1

Electrical data	
Rated current	20 A
Test voltage	42 V

Connection Data	
Connection technology	CAGE CLAMP®
Strip length	9 … 11 mm / 0.35 … 0.43 inches
Clamping units	1
Solid conductor	0.08 … 2.5 mm² / 28 … 14 AWG
Fine-stranded conductor	0.08 … 2.5 mm² / 28 … 14 AWG

Physical data	
Width	8 mm / 0.315 inches
Height	15 mm / 0.591 inches
Depth	40 mm / 1.575 inches

Downloaded from Arrow.com.

Material data

Color	orange
Fire load	0.036 MJ
Weight	3.9 g

Commercial data

PU (SPU)	50 pcs
Packaging type	Box
Country of origin	DE
GTIN	4045454293703
Customs tariff number	85366990990

Product Classification

UNSPSC	39121421
eCl@ss 10.0	27-44-03-13
eCl@ss 9.0	27-44-03-13
ETIM 9.0	EC002255
ETIM 10.0	EC002255
ECCN	NO US CLASSIFICATION

Environmental Product Compliance

CAS-No.	7439-92-1
REACH Candidate List Substance	Lead
RoHS Compliance Status	Compliant,With Exemption
RoHS Exemption	6(c)
SCIP notification number (Austria)	6cb7a1d1-c0d0-425a-b7aa-ddc1795f71db
SCIP notification number (Belgium)	7ce487f1-b5ce-48e8-9507-8c83d948a677
SCIP notification number (Bulgaria)	703cbdab-5670-458c-80be-baa4f7beb026
SCIP notification number (Czech Republic)	cb330e6d-3275-4911-8b75-037bec9d3ddc
SCIP notification number (Denmark)	dbedb628-b092-40ab-9235-3e38100561f1
SCIP notification number (Finland)	a0dbfb59-a8ab-4115-96c6-40fa0edf2183
SCIP notification number (France)	3e0dc567-9858-4526-9434-c369503d46fa
SCIP notification number (Germany)	5726ed71-f470-47e1-9a1a-1f57ae70a4fb
SCIP notification number (Hungary)	9bc9bcab-1e68-4c94-98ed-349c3c71271d
SCIP notification number (Italy)	63d1c8d1-329b-42d2-ae62-3df0ee3ba319
SCIP notification number (Netherlands)	2f935e83-8fff-48e2-bb1e-a57e29fe1bff
SCIP notification number (Poland)	ab414ebf-3880-4f57-bcd8-b716cfa6097b
SCIP notification number (Romania)	0aa388ea-b910-4be5-a982-967bf4983926
SCIP notification number (Sweden)	be25d885-a6de-4afe-84b3-7e737359d828

Downloaded from Arrow.com.

Downloads

Environmental Product Compliance

Compliance Search

Environmental Product Compliance 215-111

Documentation

Bid Text

215-111	19.02.2019	xml 3.10 KB
215-111	19.09.2017	doc 24.50 KB

CAD/CAE-Data

CAE data

EPLAN Data Portal 215-111

WSCAD Universe 215-111

Installation Notes

Conductor termination

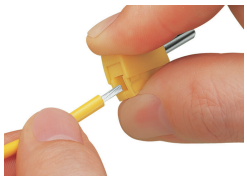

Conductor termination: Press button fully, insert stripped conductor into square entry and release.

Testing

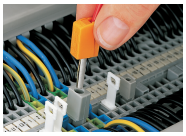

Testing via banana plug.
Picture shows a test plug adapter (Item No. 209-170).

Downloaded from Arrow.com.