MICRO SWITCH
FREEPORT, ILLINOIS, U.S.A.
A DIVISION OF HONEYWELL
FED. MFG. CODE 91929

SWITCH-ENCLOSED

CATALOG LISTING
EXH-Q26-2

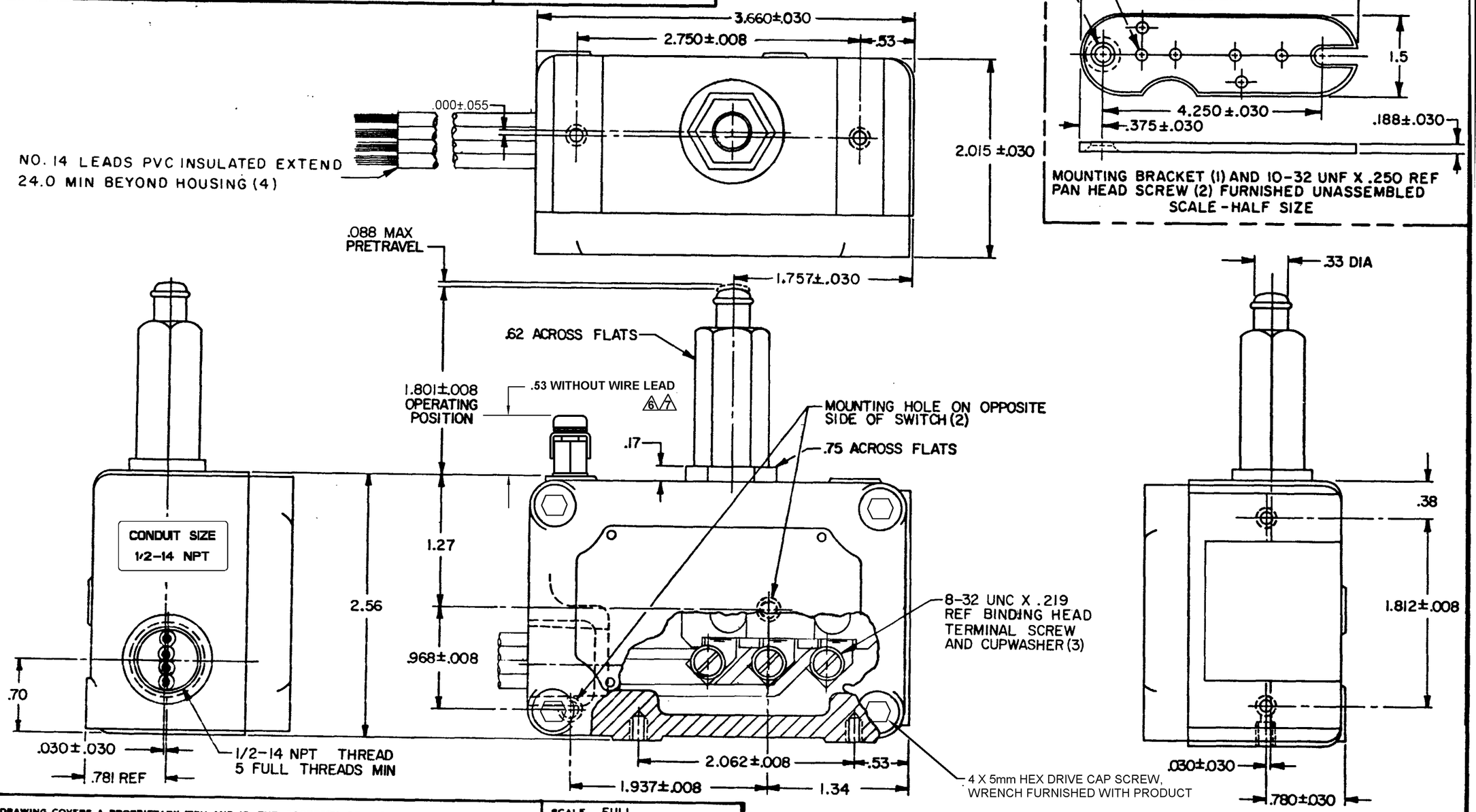

THIS DRAWING COVERS A PROPRIETARY ITEM AND IS THE PROPERTY OF MICRO SWITCH, A DIVISION OF HONEYWELL. THIS DRAWING IS NOT TO BE COPIED OR USED WITHOUT THE APPROVAL OF MICRO SWITCH.

CHARACTERISTICS	
OPERATING FORCE	3 LB MAX
RELEASE FORCE	4 OZ MIN
DIFFERENTIAL TRAVEL	.020 MAX
OVERTRAVEL	.141 MIN
SWITCH BASIC REPLACEMENT	1HS205

ELECTRICAL DATA

CONTACT ARRANGEMENT
S P D T

LINE VOLTAGE	INDUCTIVE LOAD	RESISTIVE LOAD
28 VDC (SEA LEVEL-100,000 FT)	10 AMP	25 AMP
125 VAC (SEA LEVEL-70,000 FT)	1 AMP	1 AMP

CODE L22 1A-125 VAC

SCALE FULL

DO NOT SCALE PRINT

TOLERANCES
APPLY TO DESIGN UNITS. CONVERSIONS ARE ONLY FOR REFERENCE. UNLESS NOTED, TOLERANCES ARE ±

	DIM. mm	TOL. mm/in	DIM. in	TOL. mm/in
NO PLACES	X	1/.04		
ONE PLACE	X.X	0.4/.016	X.X	0.8/.03
TWO PLACES	X.XX	0.16/.006	X.XX	0.38/.015
THREE PLACES			X.XXX	0.13/.005
ANGLES				

DESIGN UNITS SI METRIC ☐ US CUSTOMARY ■

THIRD ANGLE PROJECTION

WEIGHT

NOTES
1 MOUNTING SCREW HOLE, 10-32 UNF THREAD X .219 REF. DEEP (8)
2 EXPLOSION PROOF - UNDERWRITER'S LAB. INC. LISTING FOR HAZARDOUS LOCATIONS NEMA 7, CLASS I, GROUPS B,C AND D, NEMA 9, CLASS II, GROUPS E, F AND G
3 COMMON - BLACK LEAD; NORMALLY OPEN - BLUE LEAD; NORMALLY CLOSED - RED LEAD; GROUND - GREEN LEAD
4 - EUROPEAN HAZARDOUS LOCATIONS DESIGNATION: Ex dIIB + H2 T6 CATAGORY II 2 G
5 - SEAL RATING : NEMA 1
6 - EXTERNAL GROUND SCREW MAY BE ASSEMBLED TO ANY UNUSED MOUNTING SCREW HOLE
7 - ASSEMBLE PROVIDED SPLIT LOCKWASHER BETWEEN GROUND LUG AND HOUSING

EXH-Q26-2 | REPLACES | RELEASE NO. PR-15635 | DRAWING NUMBER M | ISSUE 5 | 03DEC09 | CMH | CHECK | 27APR05 | AK | CHECK | 10 JUN 87 | MAM | CHECK | 8 JUN 87 | TPS | DRAWN

REVISIONS
A C013019 MN 19 SEP 92
B 0012750 NM 09MAY05
C 0017245 KRB 28 NOV 05
D 0059237 LK 03DEC09

RASTER

Downloaded from Arrow.com.