Rev	AWO #	Description	Date	Appr
-	8425	Released	2/5/08	
A		REDRAWN	04/12/12	

APPROVED: _____

DATE: _____ TITLE: _____

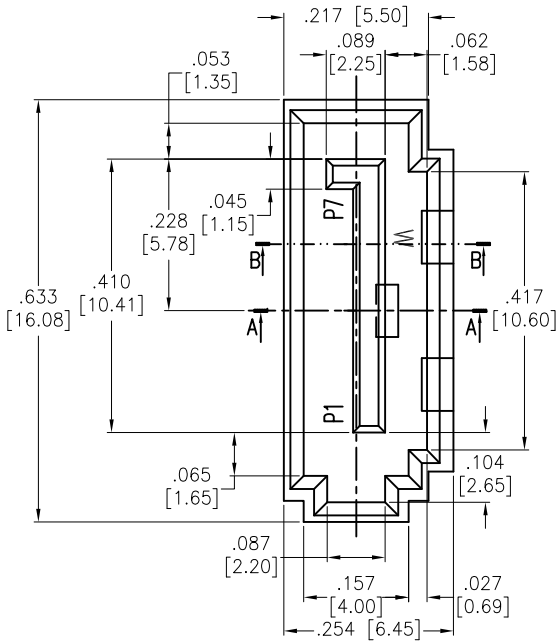

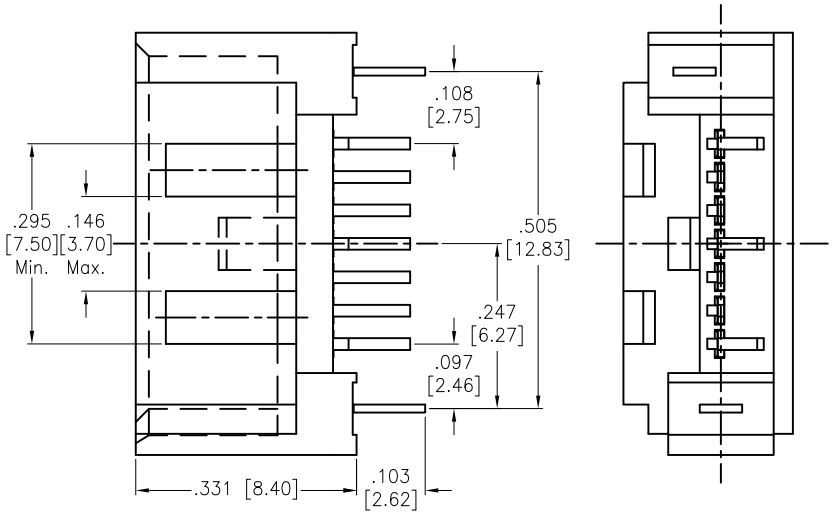

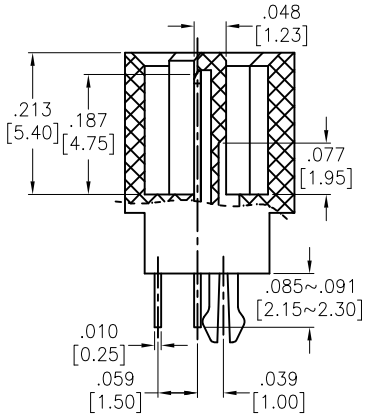

SECTION A–A

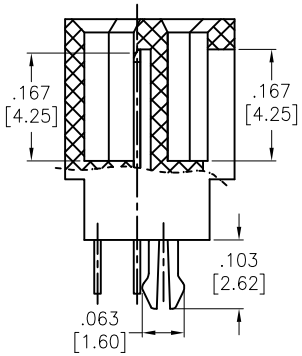

SECTION B–B

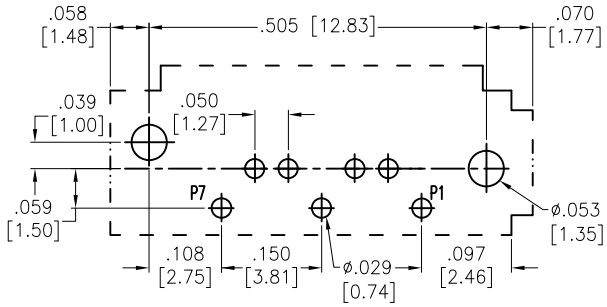

RECOMMENDED PCB LAYOUT

SPECIFICATIONS:
Material:
Insulator: Hi–Temp Thermoplastic, rated UL 94V–0
Insulator color: Black
Contacts: Brass
Plating:
Gold Flash over Nickel underplate on mating area,
Tin over Copper underplate on tails
Electrical:
Current rating: 1.5 Amps max.
Contact resistance: 30 mohms max.
Insulation resistance: 1,000 Mohms min @ 500 VAC
Dielectric withstanding voltage: 500 VAC for 1 minute
Mechanical:
Insertion force: 45N max
Withdrawal force: 10N min
Durability: 500 cycles
Temperature Rating:
Operating temperature: –55°C to +85°C
Environmental:
Lead free, RoHS compliant.

RoHS COMPLIANT

UNLESS OTHERWISE SPECIFIED
ALL DIMENSIONS ARE INCHES [MM]
TOLERANCES: EXCEPT AS NOTED

INCHES		HOLES	
.X	± .10	Ø.X	±.10
.XX	± .020	Ø.XX	±.015
.XXX	± .015	Ø.XXX	±.010

APPROVALS		DATE
DRAWN	SS	2/5/08
CHECKED	SS	
APPROVED	SS	

ADAM TECH
909 Rahway Avenue, Union, NJ 07083
Phone: 908-687-5000 Fax: 908-687-5710

TITLE: SATA 7P STRAIGHT DIP, SHIELDED THROUGH TYPE

SIZE	PART NO.	REV.
X	SATA-P-PR-VT	A

REF: S00078T | SCALE: NTS | SHEET 1 OF 1

Downloaded from Arrow.com.