Panasonic
INDUSTRY

Some part numbers are not a recommended product.
Not recommended for new design.

Aluminum Electrolytic Capacitors

Surface Mount Type

FKS series (Medium-size)

High temperature Lead-Free reflow

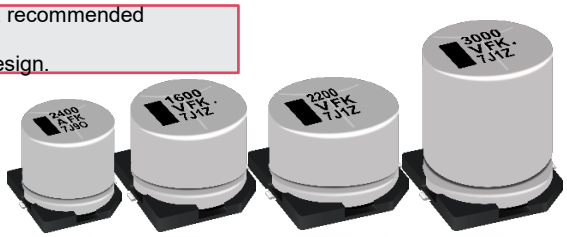

Features

- Endurance : 105 °C 5000 h
- High capacitance : 20 to 80 % higher than FK series, large capacitance up to 13000 µF
- Vibration-proof product (30G guaranteed) is available upon request
- AEC-Q200 compliant
- RoHS compliant

Specifications

Category temp. range	–55 °C to +105 °C						
Rated voltage range	6.3 V to 35 V						
Capacitance range	750 µF to 13000 µF						
Capacitance tolerance	±20 % (120 Hz / +20 °C)						
Leakage current	I ≤ 0.01 CV (µA) After 2 minutes						
Dissipation factor (tan δ)	Please see the attached characteristics list						
Characteristics at low temperature	Rated voltage (V)	6.3	10	16	25	35	(Impedance ratio at 120 Hz)
	Z (–25 °C) / Z (+20 °C)	2	2	2	2	2	
	Z (–40 °C) / Z (+20 °C)	3	3	3	3	3	
	Z (–55 °C) / Z (+20 °C)	4	4	4	3	3	
Endurance	After applying rated working voltage for 5000 hours at +105 °C ± 2 °C and then being stabilized at +20 °C, capacitors shall meet the following limits.						
	Capacitance change	Within ±30 % of the initial value					
	Dissipation factor (tan δ)	≤ 300 % of the initial limit					
	Leakage current	Within the initial limit					
Shelf life	After storage for 1000 hours at +105 °C ± 2 °C with no voltage applied and then being stabilized at +20 °C, capacitors shall meet the following limits. (Capacitors are left at room temperature and humidity for 2 hours after the test. Then, apply the rated voltage for 30min with a series protection resistance of 1000 Ω ± 10 Ω. Measure electrical characteristics after discharging the capacitor.)						
	Capacitance change	Within ±30 % of the initial value					
	Dissipation factor (tan δ)	≤ 200 % of the initial limit					
	Leakage current	Within the initial limit					
Resistance to soldering heat	After reflow soldering and then being stabilized at +20 °C, capacitors shall meet the following limits.						
	Capacitance change	Within ±10 % of the initial value					
	Dissipation factor (tan δ)	Within the initial limit					
	Leakage current	Within the initial limit					

Frequency correction factor for ripple current

Frequency (Hz)	120	1 k	10 k	100 k to
Correction factor	0.75	0.90	0.95	1.00

Marking

Example : 6.3 V 3500 µF
Marking color : BLACK

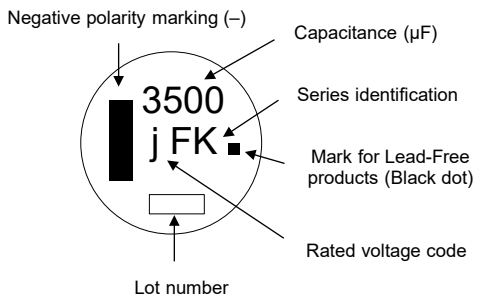

R.voltage code

j	6.3
A	10
C	16

Unit : V

E	25
V	35

Dimensions

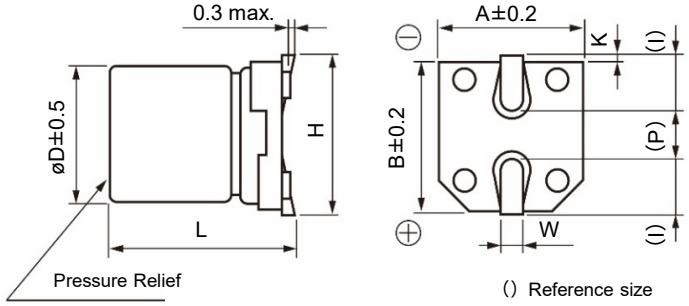

Unit : mm

Size code	øD	L	A, B	H	I	W	P	K
H13	12.5	13.5±0.5	13.5	15.0 max.	4.7	0.90±0.3	4.4	0.70±0.3
J16	16.0	16.5±0.5	17.0	19.0 max.	5.5	1.20±0.3	6.7	0.70±0.3
K16	18.0	16.5±0.5	19.0	21.0 max.	6.7	1.20±0.3	6.7	0.70±0.3
K21	18.0	21.5±0.5	19.0	21.0 max.	6.7	1.20±0.3	6.7	0.70±0.3

・The dimensions of the vibration-proof products, please refer to the page of the mounting specification.

Design and specifications are each subject to change without notice. Ask factory for the current technical specifications before purchase and/or use.
Should a safety concern arise regarding this product, please be sure to contact us immediately.

Dimensions (Vibration-proof products)

✻ The size and shape are different from standard products.

< Size code : D, D8 >

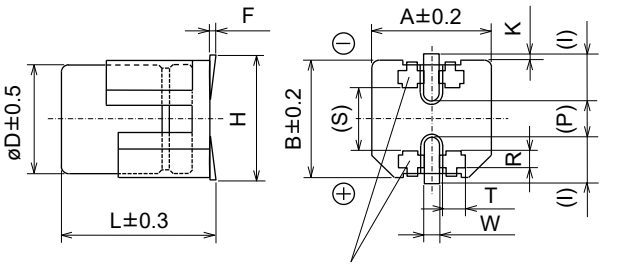

Supportive Terminals ( ) Reference size

※The diagram is not drawn to scale.

< Size code : E, F, G, H13, J16, K16, K21 >

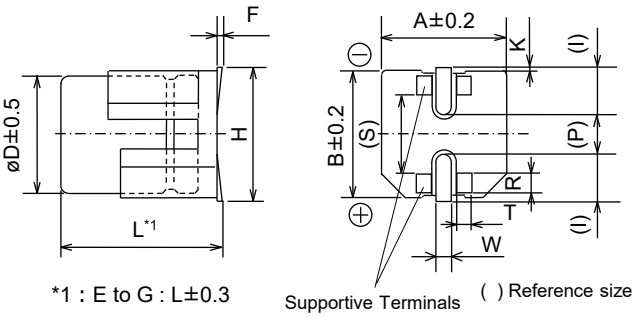

*1 : E to G : L±0.3
H13 to K21 : L±0.5

Supportive Terminals ( ) Reference size

Unit : mm

Size code	øD	L	A, B	H max.	F	I	W	P	K	R	S	T
D	6.3	6.1	6.6	7.8	0 to +0.15	2.4	0.65±0.1	2.2	0.35 $^{+0.15}_{-0.20}$	1.1±0.2	3.3	1.05±0.2
D8	6.3	8.0	6.6	7.8	0 to +0.15	2.4	0.65±0.1	2.2	0.35 $^{+0.15}_{-0.20}$	1.1±0.2	3.3	1.05±0.2
E	8.0	6.5	8.3	9.5	0 to +0.15	3.4	0.7±0.1	2.2	0.35 $^{+0.15}_{-0.20}$	0.70±0.2	5.3	1.7±0.2
F	8.0	10.5	8.3	10.0	0 to +0.15	3.4	1.2±0.2	3.1	0.70±0.2	0.70±0.2	5.3	1.3±0.2
G	10.0	10.5	10.3	12.0	0 to +0.15	3.5	1.2±0.2	4.6	0.70±0.2	0.70±0.2	6.9	1.3±0.2
H13	12.5	13.8	13.5	15.0	–0.1 to +0.15	4.7	1.2±0.2	4.4	0.70±0.3	2.2±0.2	7.1	2.4±0.2
J16	16.0	16.8	17.0	19.0	–0.1 to +0.15	5.5	1.4±0.2	6.7	0.70±0.3	3.0±0.2	9.0	1.9±0.2
K16	18.0	16.8	19.0	21.0	–0.1 to +0.15	6.7	1.4±0.2	6.7	0.70±0.3	3.0±0.2	11.0	1.9±0.2
K21	18.0	21.8	19.0	21.0	–0.1 to +0.15	6.7	1.4±0.2	6.7	0.70±0.3	3.0±0.2	11.0	1.9±0.2

Land / Pad pattern

The circuit board land/pad pattern size for chip capacitors is specified in the following table.
The land pitch influences installation strength.

● Standard products

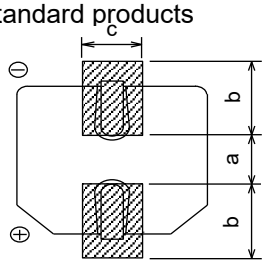

Land space

(Table of board land size vs. capacitor size) Unit : mm

Size code	a	b	c
B (ø4)	1.0	2.5	1.6
C (ø5)	1.5	2.8	1.6
D (ø6.3)	1.8	3.2	1.6
D8 (ø6.3x7.7L)	1.8	3.2	1.6
E (ø8x6.2L)	2.2	4.0	1.6
F (ø8x10.2L)	3.1	4.0	2.0
G (ø10x10.2L)	4.6	4.1	2.0
H13 (ø12.5)	3.9	6.2	2.0
J16 (ø16)	6.0	6.9	2.5
K16, K21 (ø18)	6.0	7.9	2.5

Larger dimension of "a" may prevent back fillet from being formed adequately to obtain required solder strength.

● Vibration-proof products

< Size code : D, D8 >

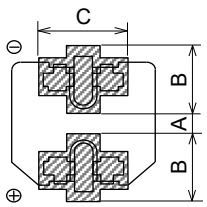

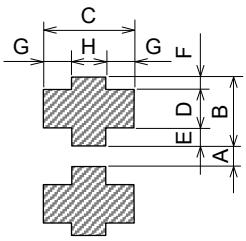

(Table of board land size vs. capacitor size) Unit : mm

Size code	A	B	C	D	E	F	G	H
D (ø6.3xL6.1)	1.2	3.6	3.2	2.0	1.0	0.7	1.0	1.2
D8 (ø6.3xL8.0)	1.2	3.6	3.2	2.0	1.0	0.7	1.0	1.2
E (ø8x6.5L)	1.8	4.2	5.0	1.3	1.5	1.4	1.5	2.0
F (ø8x10.5L)	2.7	4.0	4.7	1.3	1.0	1.7	1.1	2.5
G (ø10)	3.9	4.4	4.7	1.3	1.2	1.9	1.1	2.5
H13 (ø12.5)	3.9	6.2	6.9	2.8	1.3	2.1	2.2	2.5
J16 (ø16)	5.8	7.0	6.2	3.6	1.3	2.1	1.7	2.8
K16, K21 (ø18)	5.8	8.0	6.2	3.6	2.3	2.1	1.7	2.8

Larger dimension of "a" may prevent back fillet from being formed adequately to obtain required solder strength.

< Size code : E, F, G, H, J, K >

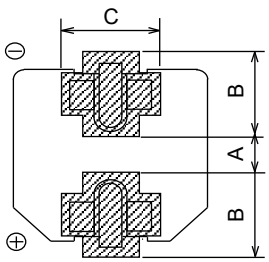

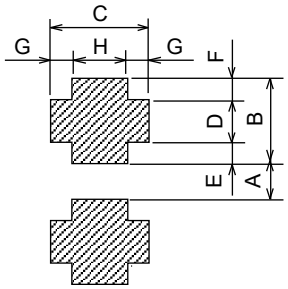

∗ Follow your design rules for mounting conditions, solderability, and fitting strength if some exists in order to determine the land pattern.

∗ The vibration-proof capacitors of size ø6.3 has support terminals extending from the bottom side to the lead edge. Then, make sure to find appropriate soldering conditions to form fillet on the support terminals if required for appearance inspection.

Explanation of part numbers

◇ Part number system

e.g.: EEEFK0J352SQ

EEE — Product classification

FK

Series	Code
FK	FK

0J

Rated voltage (V)	Code
6.3	0J
10	1A
16	1C
25	1E
35	1V

352

Capacitance (μF)	Code	Capacitance (μF)	Code
750	751	3600	362
1200	122	4300	432
1600	162	4700	472
1800	182	5600	562
2200	222	7500	752
2400	242	9100	912
2700	272	10000	103
3000	302	13000	133
3500	352		

S

Special code	Code
FKS series	S

Q

Tape width (mm)	Code
32	Q
44	M

Replace for the following configuration

Configuration	Code
Vibration proof	V

Characteristics list

Endurance : 105 °C 5000 h

Rated voltage (V)	Capacitance (±20 %) (μF)	Case size (mm) øD	L Standard	L Vibration-proof	Size code	Specification Ripple current*1 (mA rms)	Impedance*2 (Ω)	tan δ*3	Part No. Standard Product	Part No. Vibration-proof product	Reflow	Min. Packaging Q'ty (pcs) Taping
6.3	3500	12.5	13.5	13.8	H13	1100	0.06	0.30	EEEFK0J352SQ	EEEFK0J352SV	(9)	200
	7500	16.0	16.5	16.8	J16	1800	0.035	0.38	EEEFK0J752SM	EEEFK0J752SV	(9)	125
	10000	18.0	16.5	16.8	K16	2060	0.033	0.42	EEEFK0J103SM	EEEFK0J103SV	(9)	125
	NRFND 13000	18.0	21.5	21.8	K21	2640	0.025	0.50	EEEFK0J133SM	EEEFK0J133SV	(9)	75
10	2400	12.5	13.5	13.8	H13	1100	0.06	0.21	EEEFK1A242SQ	EEEFK1A242SV	(9)	200
	5600	16.0	16.5	16.8	J16	1800	0.035	0.27	EEEFK1A562SM	EEEFK1A562SV	(9)	125
	7500	18.0	16.5	16.8	K16	2060	0.033	0.31	EEEFK1A752SM	EEEFK1A752SV	(9)	125
	NRFND 9100	18.0	21.5	21.8	K21	2640	0.025	0.35	EEEFK1A912SM	EEEFK1A912SV	(9)	75
16	1800	12.5	13.5	13.8	H13	1100	0.06	0.16	EEEFK1C182SQ	EEEFK1C182SV	(9)	200
	4300	16.0	16.5	16.8	J16	1800	0.035	0.22	EEEFK1C432SM	EEEFK1C432SV	(9)	125
	5600	18.0	16.5	16.8	K16	2060	0.033	0.24	EEEFK1C562SM	EEEFK1C562SV	(9)	125
	NRFND 7500	18.0	21.5	21.8	K21	2640	0.025	0.28	EEEFK1C752SM	EEEFK1C752SV	(9)	75
25	1200	12.5	13.5	13.8	H13	1100	0.06	0.14	EEEFK1E122SQ	EEEFK1E122SV	(9)	200
	2700	16.0	16.5	16.8	J16	1800	0.035	0.16	EEEFK1E272SM	EEEFK1E272SV	(9)	125
	3600	18.0	16.5	16.8	K16	2060	0.033	0.18	EEEFK1E362SM	EEEFK1E362SV	(9)	125
	NRFND 4700	18.0	21.5	21.8	K21	2640	0.025	0.20	EEEFK1E472SM	EEEFK1E472SV	(9)	75
35	750	12.5	13.5	13.8	H13	1100	0.06	0.12	EEEFK1V751SQ	EEEFK1V751SV	(9)	200
	1600	16.0	16.5	16.8	J16	1800	0.035	0.14	EEEFK1V162SM	EEEFK1V162SV	(9)	125
	2200	18.0	16.5	16.8	K16	2060	0.033	0.14	EEEFK1V222SM	EEEFK1V222SV	(9)	125
	NRFND 3000	18.0	21.5	21.8	K21	2640	0.025	0.16	EEEFK1V302SM	EEEFK1V302SV	(9)	75

*1: Ripple current (100 kHz / +105 °C)
*2: Impedance (100 kHz / +20 °C)
*3: tan δ (120 Hz / +20 °C)
・Please refer to the page of "Reflow Profile" and "The Taping Dimensions".

NRFND Not recommended for new design

Design and specifications are each subject to change without notice. Ask factory for the current technical specifications before purchase and/or use.
Should a safety concern arise regarding this product, please be sure to contact us immediately.

Safety and Legal Matters to Be Observed

Product specifications and applications

■ Please be advised that this product and product specifications are subject to change without notice for improvement purposes. Therefore, please request and confirm the latest delivery specifications that explain the specifications in detail before the final design, or purchase or use of the product, regardless of the application. In addition, do not use this product in any way that deviates from the contents of the company's delivery specifications.

■ Unless otherwise specified in this catalog or the product specifications, this product is intended for use in general electronic equipment (AV products, home appliances, commercial equipment, office equipment, information and communication equipment, etc.).
When this product is used for the following special cases, the specification document suited to each application shall be signed/sealed (with Panasonic Industry and the user) in advance..These include applications requiring special quality and reliability, wherein their failures or malfunctions may directly threaten human life or cause harm to the human body (e.g.: space/aircraft equipment, transportation/traffic equipment, combustion equipment, medical equipment, disaster prevention/crime prevention equipment, safety equipment, etc.).

Safety design and product evaluation

■ Please ensure safety through protection circuits, redundant circuits, etc., in the customer's system design so that a defect in our company's product will not endanger human life or cause other serious damage.

■ This catalog shows the quality and performance of individual parts. The durability of parts varies depending on the usage environment and conditions. Therefore, please ensure to evaluate and confirm the state of each part after it has been mounted in your product in the actual operating environment before use.
If you have any doubts about the safety of this product, then please notify us immediately, and be sure to conduct a technical review including the above protection circuits and redundant circuits at your company.

Laws / Regulations / Intellectual property

■ The transportation of dangerous goods as designated by UN numbers, UN classifications, etc., does not apply to this product. In addition, when exporting products, product specifications, and technical information described in this catalog, please comply with the laws and regulations of the countries to which the products are exported, especially those concerning security export control.

■ Each model of this product complies with the RoHS Directive (Restriction of the use of hazardous substances in electrical and electronic equipment) (2011/65/EU and (EU) 2015/863). The date of compliance with the RoHS Directive and REACH Regulation varies depending on the product model.
Further, if you are using product models in stock and are not sure whether or not they comply with the RoHS Directive or REACH Regulation, please contact us by selecting "Sales Inquiry" from the inquiry form.

■ During the manufacturing process of this product and any of its components and materials to be used, Panasonic Industry does not intentionally use ozone-depleting substances stipulated in the Montreal Protocol and specific bromine-based flame retardants such as PBBs (Poly-Brominated Biphenyls) / PBDEs (Poly-Brominated Diphenyl Ethers). In addition, the materials used in this product are all listed as existing chemical substances based on the Act on the Regulation of Manufacture and Evaluation of Chemical Substances.

■ With regard to the disposal of this product, please confirm the disposal method in each country and region where it is incorporated into your company's product and used.

■ The technical information contained in this catalog is intended to show only typical operation and application circuit examples of this product. This catalog does not guarantee that such information does not infringe upon the intellectual property rights of Panasonic Industry or any third party, nor imply that the license of such rights has been granted.

■ Design, materials, or process related to technical owned by Panasonic Industry are subject to change without notice.

Panasonic Industry will assume no liability whatsoever if the use of our company's products deviates from the contents of this catalog or does not comply with the precautions. Please be advised of these restrictions.

Matters to Be Observed When Using This Product

(Conductive polymer hybrid aluminum electrolytic capacitor / Aluminum electrolytic capacitor)

Use environments and cleaning conditions

■ This product (capacitor) is intended for standard general-purpose use in electronic equipment, and is not designed for use in the specific environments described below. Using the product in such specific environments or service conditions, therefore, may affect the performance of the product.
Check with us about the performance and reliability of the product first before using the product.

(1) Used at a temperature higher than the upper limit category temperature or lower than the lower limit category temperature.
(2) Used in an environment where the product is directly exposed to water, salt water, oil, etc., or in a liquid, such as water, oil, chemicals, and organic solvents.
(3) Used in an outdoor environment where the product is exposed to direct sunlight, ozone, radiation, UV-rays, etc., or in a dusty place.
(4) Used in a wet place (dew concentration on a resistor, water leakage, etc.), a place exposed to sea breeze, or a place filled with a corrosive gas, such as Cl_2, H_2S, NH_3, SO_2, or NO_X.
(5) Used in an environment filled with a toxic gas (hydrogen sulfide, sulfurous acid, nitrous acid, chlorine and chlorine compound, bromine and bromine compound, ammonia, etc.)
(6) Used in an environment where static electricity and electromagnetic waves are strong.
(7) Located close to heating component or a flammable material, such as a vinyl cable.
(8) Sealed with a resin, etc.
(9) Cleansed with a solvent, water, or a water-soluble cleaner, to remove solder flux after soldering.
(10) Used in an environment where an acidic or alkali atmosphere is present.
(11) Used in an environment where excessive vibration or mechanical shocks exceeding a specified range is applied to the product (even if the applied vibration or mechanical shocks is within the specified range, it may cause the product to resonate, in which a large vibration acceleration may be generated. Make sure to evaluate/check such vibrations or mechanical shocks applied to the product in an actual condition).
Panasonic Industry's conditions for vibration test are shown in the table below. Random waveform is not guaranteed.
For radial type, datasheet is also available if requested.

Item	Standard	Vibration-proof
Waveform	Sine	Sine
Frequency	10 - 55 Hz	5 - 2000 Hz
Direction	X, Y, Z axis	X, Y, Z axis
Duration	2 hours each direction	2 hours each direction
Max p-p amplitube	$1.5mm_{PP}$	$5mm_{PP}$
Max acceleration	90 m/s^2 (9.1 G)	294 m/s^2 (30 G)

(12) Used under a low atmospheric pressure condition or depressurized condition.

■ The capacitor withstands an immersion cleaning process where the board carrying the product is immersed in a cleaning solution of 60 °C or lower for less than 5 minutes and withstands an ultrasonic cleaning process as well. However, ensure to thoroughly rinse and dry it. Some cleaning methods erase or blur notes on the capacitor in some cases.
Some types of capacitors are not washable and some cleaning solutions cannot be used to clean a capacitor.
The following water-base solvents have been validated for cleaning. Contact a sales representative for more information.

Pine Alpha ST-100S, Cleanthrough 750H/750L/710M

■ Keep the cleaning solution under strict contamination control (conductivity, pH, specific gravity, water content, etc.).
A contaminated cleaning solution will show a high chlorine concentration, thereby corroding the interior of the capacitor in some cases. Keep the flux concentration in the cleaning solution at a 2% mass or less.

■ Unless otherwise specified in the specifications, avoid cleaning the capacitor with a halogen-based solvent, an alkaline solvent, a petroleum-based solvent, xylene, or acetone. Using a halogen-based solvent may result in a case where the solvent infiltrates (leaks) into the capacitor and break-down releasing chlorine, which reacts with aluminum which can corrode the capacitor interior. 1-1-1 trichloroethane is particularly harmful to a capacitor. Never use it to clean a capacitor.
A alkaline solvent may corrode (dissolve) an aluminum case, a petroleum-based solvent and xylene may damage the sealing rubber and accelerate its deterioration, and acetone may erase notes on the capacitor.
To protect the global environment, refrain from using an ozone depleting substance as the cleaning solution.

■ Right after the board cleaning, subject the capacitor to a forced drying process so that no cleaning solution remains between the sealing part of the capacitor and the printed board.
Set a drying temperature equal to or lower than the upper limit category temperature.

■ When an adhesive or coating agent is used to fix the capacitor and prevent dampening of the board, specific types of solvents included in some adhesives or coating agents may corrode the capacitor. Select a non-halogen solvent for the material making up the adhesive or coating agent. Do not use a chloroprene-based polymer.
Solidify and dry the adhesive or coating agent sufficiently to prevent its solvent component from remaining on the capacitor. Leave at least 1/3 of the sealing part unsealed on the surface to which the adhesive or coating agent is applied.

■ Do not use the product in a structure sealed by potting or molding. The pressure of a molding resin on a capacitor may deform the capacitor. In addition, the resin covering the capacitor may affect its heat dissipation performance or may leak into the product. These factors lead to the significant degradation of the capacitor's characteristics and reliability.
There is also a concern that an electrolytic solution permeating the sealing rubber may agglomerate and cause a short circuit.

■ When the capacitor is used in a circuit where an impact voltage is applied or a high voltage is applied in a short period (transient phenomenon) or a high pulse voltage is applied, make sure to use the capacitor at a voltage equal to or lower than its rated voltage.

■ The product contains an electrolytic. Improper use of the capacitor leads not only to the rapid degradation of its characteristics but also to electrolytic leakage. These problems damage the circuit board and may lead to destruction of the entire circuit set.

Response to anomalies and handling conditions

■ When you see gas coming out of an activated pressure relief valve of a capacitor during use of a circuit set, turn off the main power supply of the circuit set or pull the power cord plug out of the wall-outlet. If you leave the power supply on and the capacitor short-circuits, it will damage the circuit, or the gas can turn into a liquid, which will cause the circuit to short. In the worst case scenarios, these events may develop into a more serious incident, such as burnout of the circuit set. The gas coming out of the pressure relief valve of a capacitor is not smoke, but is the electrolytic solution in its gaseous state.

■ When the pressure valve of the capacitor is activated, it emits a high-temperature gas of over 100 °C. Do not bring your face near the valve. In case the gas jetting out of the valve gets in your eyes or comes into your mouth, wash your eyes with water or rinse your mouth immediately. If the gas hits your skin, wash it away with soap.

■ If you touch a terminal of the product during use of the circuit set, you will get an electric shock. The aluminum case of the product has an exposed part with no insulation. Do not touch the exposed part because it is as dangerous as the terminal.

■ Do not create a short circuit between terminals of the product by inserting a conductor therebetween. Do not splash a conductive solution, such as an acidic or alkali solution, on the capacitor. It puts the capacitor in a shorted state, which causes the circuit to fail and destroys the capacitor as well.

■ When a silicone material containing a relatively large amount of a low-molecular-weight siloxane is located close to the product, it may cause the capacitor problems with its electrical performance.

■ When electronic equipment having the capacitor built therein is exported to overseas markets, wooden packaging materials are fumigated with a halogen compound, such as methyl bromide. In such cases, if the packaging material subjected to the fumigation treatment is not dried sufficiently, halogen remaining on the packaging material may leach into the capacitor during transportation and trigger a corrosive reaction in the capacitor. When carrying out the fumigation treatment, carefully examine the dried packaging material to confirm that no halogen remains on the packaging material. Never fumigate the entire electronic equipment in its packaged state.

Reliability and product life

■ The product life is affected by temperatures. In general, a 10 °C drop in the temperature will double the life.
Use the capacitor at a temperature as low as possible from the upper limit category temperature.

■ Using a capacitor under a temperature condition outside a specified temperature range causes heavy degradation of the capacitor characteristics, which may result in breakage of the capacitor. You need to confirm not only the ambient temperature and internal temperature of the capacitor but also the temperature of the capacitor's top surface, which is given by radiant heat from built-in heating elements (a power transistor, IC, resistance, etc.) and heat generated by self-heating induced by ripple current. Do not place a heating element on the back of the capacitor.

■ The product life is given by the following equation.

$$L2 = L1 \times 2^{\frac{T1-(T2+\Delta T)}{10}} \quad \text{Where } T1 \geqq T2$$

L1 : Guaranteed life (h) at temperature T1 (°C)
L2 : Expected life (h) at temperature T2 (°C)
T1 : Upper category temperature (°C)
T2 : Ambient temperature of capacitor (°C)
⊿T : Temperature increase caused by ripple current (°C)

* In the case of a hybrid type, category temperature (°C) + temperature increase caused by rated ripple current (°C)

■ Do not use the product for a period longer than its specified service life. A capacitor with its service life ended may cause the following problems: rapid degradation of the product characteristics, short circuit, unnecessary activation of the pressure valve, electrolytic solution leakage, etc. Note that the estimated service life is not longer than 15 years due to the limited environment-resistant property of the sealing rubber.

■ When the capacitor is used under a high-temperature condition for a long period, minute cracks develop on the surface of the sealing rubber or the case surface turns brown in some cases. These phenomena, however, have no effects on the reliability of the capacitor.

■ A capacitor conforming to "AEC-Q200" refers to a capacitor having passed some or all of evaluation test items defined in AEC-Q200.
To know the detailed specifications of each capacitor or specific evaluation test scores, please contact us.
We issue a the product specifications sheet for each product ordered. Please confirm the product specifications sheet when you place an order to us.

Circuit design and circuit board design

■ The electrical characteristics change as a result of temperature/frequency fluctuations. Take electrical characteristic changes into consideration when working out a circuit design.

(1) Temperature fluctuations
High-temperature condition : increase in leak current
Low-temperature condition : decrease in capacitance, increase in the tangent to the loss angle, increase in impedance (the hybrid type is excluded), etc.
(2) Frequency fluctuations
High-frequency condition : decrease in capacitance, increase in the tangent to the loss angle, decrease in impedance, etc.
Low-frequency condition : more heat generation by ripple current as a result of an increase in equivalent series resistance

■ The group of factors described below may lead to rapid degradation of the capacitor characteristics, short circuit, or electrolytic solution leakage. They may give rise to sharp heat/gas generation, too, in which case the increasing internal pressure actuates the pressure valve, causes the electrolytic solution to leak out of the sealing part, and, in a worst-case scenario, causes an explosion or ignition incident. When a capacitor bursts, it may scatter flammable materials (electrolytic solution, etc.) in its surroundings.

(1) Reverse voltage: The capacitor has preset polarity. Do not apply a reverse voltage to the capacitor.
Confirm the polarity indicated on the capacitor and then use it.
(2) Charge/discharge: Avoid using the capacitor in a circuit that frequently repeats sharp charge/discharge cycles or a circuit that requires relatively slow but highly frequent charge/discharge cycles. In cases where you use the capacitor in such circuits, make sure to inform us of the charge/discharge conditions.
Ensure that a rush current does not exceed 100 A.
(3) ON/OFF: Avoid using the capacitor in an on/off circuit that repeatedly switches on and off more than 10,000 times a day. In cases where you use the product in such circuits, make sure to inform us of the circuit conditions, etc.
(4) Overvoltage: Do not apply an overvoltage higher than the rated voltage (higher than the surge voltage when the voltage application period is short). A peak value given by superposing a ripple voltage (AC component) on a DC voltage must be equal to or lower than the rated voltage.
(5) Ripple current: Do not allow an excessively large ripple current (larger than the rated ripple current specified in the specifications) to flow through the capacitor. Even if a ripple current flow in the capacitor is equal to or smaller than the rated ripple current, a reverse voltage flow may be generated in the capacitor when the DC bias voltage is low flow in the capacitor. Keep the ripple current flow within a range in which no reverse voltage is generated.
Even if the ripple current flow is kept equal to or smaller than the rated ripple current, using the capacitor for a period longer than its service life intensifies the degradation of the ESR characteristics, resulting in an increase in internal heating caused by the ripple current. As a result, the pressure valve is actuated, the exterior case or rubber swells, the electrolytic solution leaks, and, in a worst-case scenario, the capacitor short-circuits and ignites or explodes.

- Because the impedance of the capacitor is close to the circuit impedance, capacitors connected in parallel in the circuit may damage the whole current balance, in which, a ripple current higher than the rated ripple current may flow in some of the capacitors. To prevent concentration of ripple current on the low-impedance side, use capacitors with the same part number and avoid the partiality of cable impedances. Do not use capacitors connected in series.

- When the capacitor is mounted on a double-side wiring board, do not place the wiring pattern directly underneath where the product is mounted. In case the electrolytic solution leaks out, it may short-circuit the pattern and cause tracking or migration. Consider a case where the product is a radial lead capacitor and is mounted on a board with through-holes. In this case, if the sealing part of the capacitor and the board surface stick close to each other, solder flows up to the capacitor during a dip soldering process, which may cause short circuit between the anode and cathode of the capacitor. In such a case, the outer laminate of the product may be damaged. The position of holes, therefore, must be determined properly.

- When designing a printed board carrying radial lead capacitors, make through-holes across the gap equal to the gap between the leads (terminals) of the capacitor. If the gap between the through-holes is narrower or wider than the gap between the leads, stress is applied to the leads when the capacitor is inserted in the holes.
  This may result in increasing leak current, short circuit, wire breaking, or electrolytic solution leakage.

- A capacitor which has the pressure valve on the case must be provided with a space formed above the pressure valve so that the pressure valve operates without hinderance. When the product is 6.3 mm to 16 mm in diameter, form a space of 2 mm or larger. When the product is 18 mm in diameter, form a space of 3 mm or larger.
  If the space is not large enough, it will impair the operability of the pressure valve and may lead to an explosion incident.

- Design the circuit in such that the pattern, especially a line pattern carrying high voltage or large current, is not formed above the pressure valve. Upon its activation, the pressure valve emits a flammable high-temperature gas of over 100 °C. This may cause a secondary accident, such as the gas condensing on the pattern and the wire sheathing being melted and catching on fire.

- Be careful with resonance of the capacitor mounted on the board. When a large load is applied to the capacitor at the frequency close to the resonance frequency, it may cause the capacitor to come off or widely change its characteristics.

- Completely isolate the case of the capacitor from the cathode terminal and the circuit pattern.

- The laminate or outer sleeve covering of the product is for displaying information on the product and does not have a guaranteed insulating function.
  The laminate may turn brown under a high-temperature condition. However, that does not cause problems with markings recognition on the product surface or electrical performance.
  The outer sleeve may crack when dipped in a xylene or toluene solution and exposed to high temperature.

Mounting conditions

- Do not reuse a capacitor that was incorporated in a circuit set and energized in the past. Do not use a capacitor that was dropped on the floor.
  Do not use a capacitor in its compressed form. Compressing the capacitor makes it less airtight, resulting in poor performance, shorter guaranteed life, and electrolyte leakage.

- A re-striking voltage is generated in a capacitor in some cases. In such a case, let the capacitor discharge through a resistor of about 1 kΩ.

- When a capacitor is kept in storage for a long period, you may find the leak current from the capacitor has increased. In such a case, make voltage adjustment through a resistor of about 1 kΩ.

- Before mounting the capacitor on the board, confirm the ratings (capacitance, rated voltage, etc.) and polarity of the capacitor. Before mounting a surface-mounted type capacitor, confirm its terminal dimensions and land size.
  Before mounting a radial lead type capacitor, confirm its terminal interval and hole interval. If the terminal interval is not the specified one, stress is applied to internal elements, which may cause problems, such as a short circuit and insufficient mounting strength.
  When the terminal interval and the hole interval of the radial lead type capacitor do not match and therefore the capacitor's leads need to be readjusted, make sure that the readjustment does not apply any stress to the capacitor's body.

- Confirm the applied pressure when using an automatically mounting process for a surface-mounted type capacitor. Excessive pressure may result in increasing leak current, short circuit, the capacitor coming off from the board, and the like. When automatically mounting the radial lead type capacitor, check the wear of a cutter for cutting the leads and confirm that the angle of clinching the leads is not too acute with regards to the board. Clinching the leads at too acute of an angle applies tensile stress to the leads, which may lead to destruction of the capacitor.

- Follow soldering conditions (preheating, soldering temperature/time, the number of soldering, etc.) in the specification sheet. A high peak temperature or a long heating time causes the degradation of electrical characteristics or a reduction in the guaranteed life. Note that the specified soldering conditions indicate conditions under which the degradation of capacitor characteristics do not occur but do not indicate conditions under which stable soldering can be performed. Check and set conditions under which stable soldering can be performed, on a case-by-case basis. Measure the temperature of the capacitor, using a thermocouple bonded to the top of the capacitor with an epoxy-based adhesive. This temperature measurement must be conducted in a mass-production setup.

- The surface-mounted type capacitor is soldered by reflow soldering only. It cannot be soldered by flow soldering or dip soldering. Carry out reflow soldering with an atmospheric heat transfer method using infrared hot air, etc.
  When carrying out two rounds of reflow processes, carry out the second reflow process after the capacitor's temperature settles down to a normal temperature. In the case of VPS reflow, a sharp rise in the capacitor temperature causes a change in the characteristics and appearance of the capacitor, which may give rise to a problem with capacitor mounting. We therefore recommend execution of VPS flow at a temperature rise rate of 3 °C/second or lower. For more information about this matter, please contact us.

- Reflow soldering, under the reflow conditions we recommend, might result in discoloring or swelling of the case or crack formation on the ink mark indicating the cathode. These minor problems, however, do not affect the reliability of the capacitor at all.

- A 6.3-mm diameter vibration-resistant capacitor has a structure that covers the auxiliary terminals to the sides of a seat plate. In cases where you confirm formation of a fillet on the sides of the auxiliary terminals by an image recognition means, etc., examine soldering conditions for the formation of a sufficient fillet on the auxiliary terminals in advance before carrying out the soldering process.
  Even if the formation of a sufficient fillet on the auxiliary terminals is not confirmed, a solder junction between the lower surface of the auxiliary terminals and the board ensures vibration-resistant performance, meaning the reliability of the capacitor is not affected.

- The radial lead type capacitor cannot be soldered by reflow soldering. Do not dip the capacitor body, except the leads, in solder. Heat from the solder raises the internal pressure of the capacitor and destroys it. Solder the capacitor according to the following soldering conditions: soldering temperature of 260 °C ±5 °C and soldering time of 10 seconds ±1 second.

- Ensure that other components do not come in contact with the capacitor during the soldering process. When a radial lead type capacitor is set in close contact with the board, check the soldered state of the capacitor well, because its sealing rubber has no venting structure.

- When manually soldering the capacitor, follow the soldering conditions (soldering temperature/time) specified in the specification sheet or adopt a soldering temperature of 350 °C and a soldering time of 3 seconds or less.
  When you need to remove a capacitor already soldered, remove it after the solder is melted sufficiently so that no stress is applied to the terminals of the capacitor. Be careful not to let the solder iron tip touch the capacitor.
  The solder iron touching the capacitor may damage the capacitor.

- When the temperature of the capacitor becomes extremely high due to preheating, solidification of the setting resin, etc., may cause the outer sleeve of the capacitor to shrink or crack. When treating the capacitor in a thermosetting furnace, etc., place the capacitor in an atmosphere of 150 °C for 2 minutes or less.

- Do not tilt or twist the capacitor soldered to a printed board or hold the capacitor to carry the board or hit the capacitor against something. Such actions apply a force to the internal elements through the terminals and may destroy the product.

- Using highly active halogenous (chlorine-based or bromic) solder flux poses a concern that residual solder flux will have negative impact on the performance and reliability of the capacitor. Check the influence of residual solder flux before using such solder flux.

Storage conditions

■ A capacitor left for a long period is prone to have a greater flow of leak current. This happens because the oxide film deteriorates under a no-load condition. Voltage application to the capacitor reduces the leak current.
However, at the start of voltage application, a large flow of film recovery current increases the leak current, which may cause a circuit failure, etc.

■ The storage period of a capacitor is 42 months from the shipment inspection day. However, the storage period of capacitors not listed in the following table is specified as 12 months.
Store the capacitor in a place where a normal temperature condition (5°C to 35°C) and a normal humidity condition (45% to 85%) are maintained and direct sunlight is blocked.

Product category	Series	Storage period
Hybrid type	All hybrid series	42 months from the shipment inspection day
Surface-mounted type other than the hybrid type	S (hot lead-free reflow), HA (hot lead-free reflow) HB (hot lead-free reflow, 5.4 mm in height) HC, HD, FCA, FC, FKA, FK, FKS, FP,FT, FH, FN TG, TK, TP, TC, TCU, TQ	
Radial lead type other than the hybrid type	FC-A, FK-A, HD-A, TA-A, TP-A, FP-A	

■ Avoid storing the capacitor in environments not specified in the delivery specification sheet or in the following environments or conditions.

(1) Used at a temperature higher than the upper limit category temperature or lower than the lower limit category temperature
(2) Environments where the capacitor is exposed to water, salt water, or oil
(3) Environments where dew concentrates on the capacitor
(4) Environments filled with a toxic gas (hydrogen sulfide, sulfurous acid, nitrous acid, chlorine and chlorine compound, bromine and bromine compound, ammonia, etc.)
(5) Environments where the product is exposed to ozone, radiation, UV-rays, etc.
(6) Environments where vibrations or mechanical shocks exceeding a specified range is applied to the capacitor

Reference information

Guidelines

Some of the product use guidelines described herein are excerpted from JEITA RCR-2367D "Safety application guide for fixed aluminum electrolytic capacitors for use in electronic equipment," a technical report issued by the Japan Electronics and Information Technology Industries Association on October 2017. For more detailed information, please see the above technical report.

Intellectual property

Panasonic Group provides customers with safe products and services. We are also making great efforts to protect our intellectual property rights for Panasonic Group products. Typical patents related to this product are as follows. (Hybrid type)

[U.S. patent]
USP Nos. 7497879, 7621970, 9208954, 9595396, 9966200, 10453618, 10559432, 10679800, 10685788, 10790095, 10262806, 10896783, 11348739, 11094471, 12062501, 10563318, 10865494, 10373763