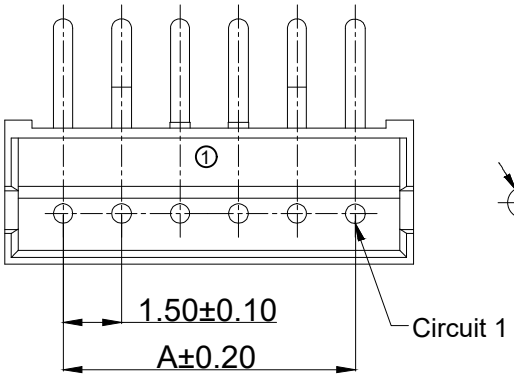

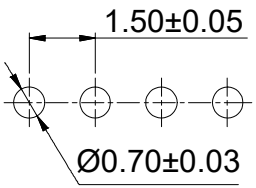

P.C.B LAYOUT

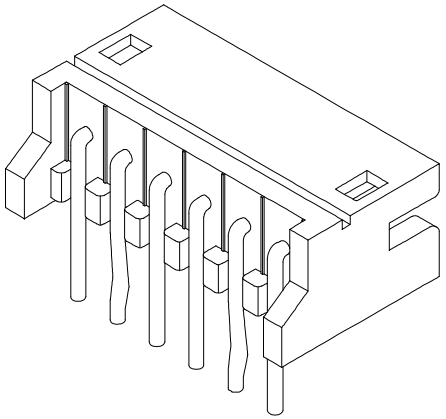

NOTE:

Voltage Rating:	100V AC/DC
Current Rating:	1A AC/DC
Withstanding Voltage:	500V AC/minute
Insulation Resistance:	500MΩ Min
Temperature Range:	-40℃ to +105℃
Contact Material:	Brass
Contact Plating:	Tin over Nickel
① Insulator:	Nylon 66, UL94V-0, Beige;

Mating with A-WBH-G001EG-xxCB01 Series Housing

Order Code:
A-WBP-G001EA-xxTB01
Pin Count

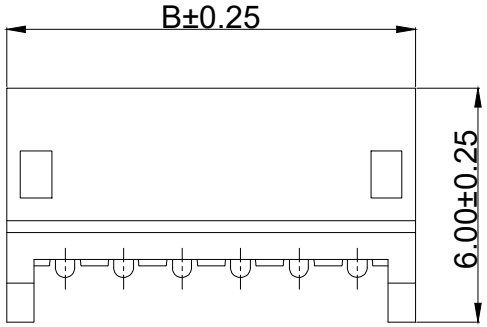

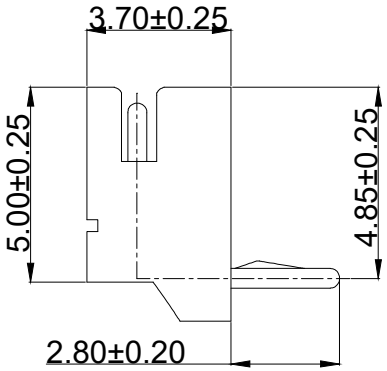

PART NO.	Dimensions	
	A	B
A-WBP-G001EA-02TB01	1.50	4.50
A-WBP-G001EA-03TB01	3.00	6.00
A-WBP-G001EA-04TB01	4.50	7.50
A-WBP-G001EA-05TB01	6.00	9.00
A-WBP-G001EA-06TB01	7.50	10.50
A-WBP-G001EA-07TB01	9.00	12.00
A-WBP-G001EA-08TB01	10.50	13.50
A-WBP-G001EA-09TB01	12.00	15.00
A-WBP-G001EA-10TB01	13.50	16.50
A-WBP-G001EA-11TB01	15.00	18.00
A-WBP-G001EA-12TB01	16.50	19.50
A-WBP-G001EA-13TB01	18.00	21.00
A-WBP-G001EA-15TB01	21.00	24.00

RoHS compliant

Unit:mm

Scale	Free
TOLERANCE	
.X	±0.25
.XX	±0.20
.XXX	±0.15
DIM	TOL
Angle	TOL

Id.	Modification	Date	Name
①	Update	23.05.2022	Segal
⓪	Drawn	25.03.2021	Luca

	Date	Name
Drawn	25.03.2021	Luca
Approved	23.05.2022	Segal

ASSMANN wsw components

Description: Wire to Board Connector
Wafer / 90° / THT / 1.50mm

ASSMANN WSW-No.
A-WBP-G001EA-xxTB01

Drawing-No.
ASS 8883 CO

rev01

Customer-No.

SHEET
1 / 6

SV5053

Downloaded from Arrow.com.

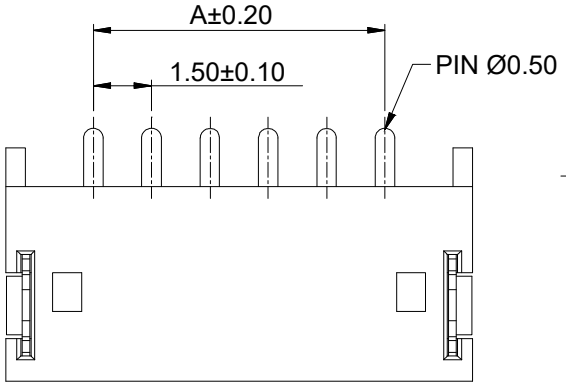

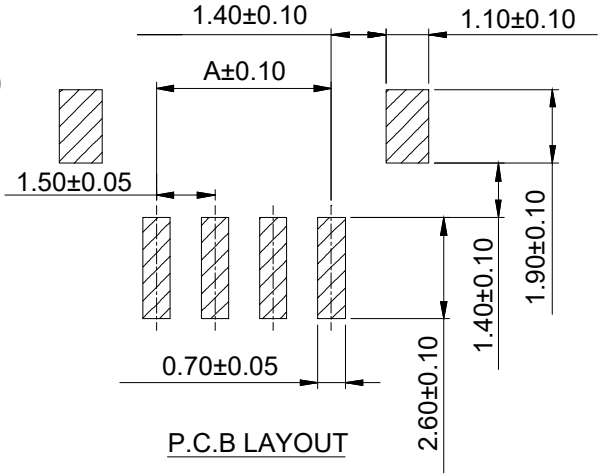

P.C.B LAYOUT

NOTE:

Voltage Rating:	100V AC/DC
Current Rating:	1A AC/DC
Withstanding Voltage:	500V AC/minute
Insulation Resistance:	500MΩ Min
Temperature Range:	-40℃ to +105℃
Contact Material:	Brass
Contact Plating:	Tin over Nickel
① Insulator:	Nylon 6T, UL94V-0, Beige;

Mating with A-WBH-G001EG-xxCB01 Series Housing

Order Code:
A-WBP-G001EA-xxSR01
Pin Count

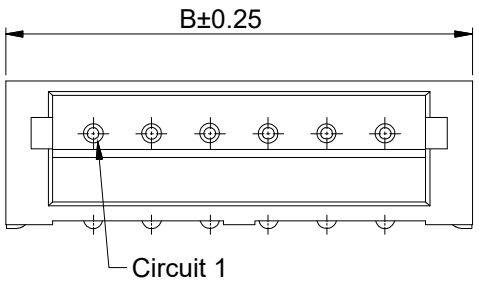

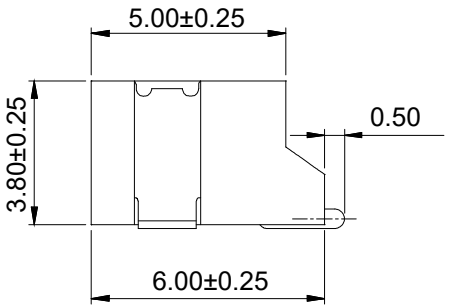

PART NO.	Dimensions	
	A	B
A-WBP-G001EA-02SR01	1.50	6.00
A-WBP-G001EA-03SR01	3.00	7.50
A-WBP-G001EA-04SR01	4.50	9.00
A-WBP-G001EA-05SR01	6.00	10.50
A-WBP-G001EA-06SR01	7.50	12.00
A-WBP-G001EA-07SR01	9.00	13.50
A-WBP-G001EA-08SR01	10.50	15.00
A-WBP-G001EA-09SR01	12.00	16.50
A-WBP-G001EA-10SR01	13.50	18.00
A-WBP-G001EA-11SR01	15.00	19.50
A-WBP-G001EA-12SR01	16.50	21.00
A-WBP-G001EA-13SR01	18.00	22.50

RoHS compliant

Unit:mm

Scale	Free
TOLERANCE	
.X	±0.25
.XX	±0.20
.XXX	±0.15
DIM	TOL
Angle	TOL

Id.	Modification	Date	Name
①	Update	23.05.2022	Segal
⓪	Drawn	25.03.2021	Luca

	Date	Name
Drawn	25.03.2021	Luca
Approved	23.05.2022	Segal

ASSMANN wsw components

Description: Wire to Board Connector
Wafer / 90° / SMT / 1.50mm

ASSMANN WSW-No.
A-WBP-G001EA-xxSR01

Drawing-No.
ASS 8883 CO

rev01

Customer-No.

SHEET
2 / 6

SV5053

Downloaded from Arrow.com.

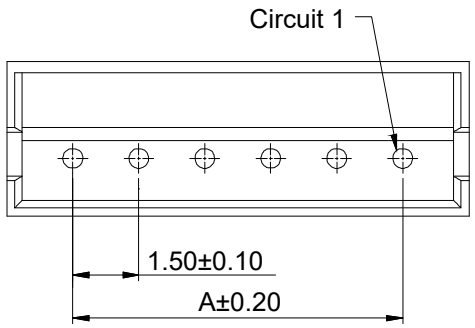

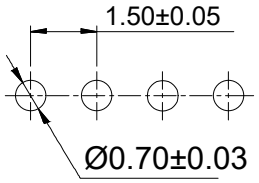

P.C.B LAYOUT

NOTE:

Voltage Rating:	100V AC/DC
Current Rating:	1A AC/DC
Withstanding Voltage:	500V AC/minute
Insulation Resistance:	500MΩ Min
Temperature Range:	-40℃ to +105℃
Contact Material:	Brass
Contact Plating:	Tin over Nickel
① Insulator:	Nylon 66, UL94V-0, Beige;

Mating with A-WBH-G001EG-xxCB01 Series Housing

Order Code:
A-WBP-G001EG-xxTB01
Pin Count

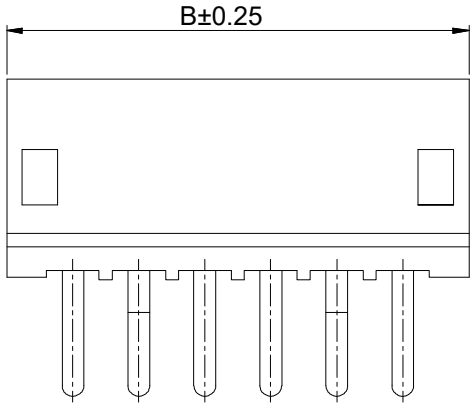

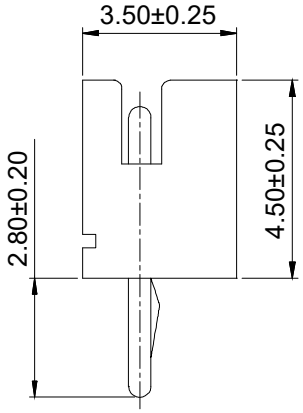

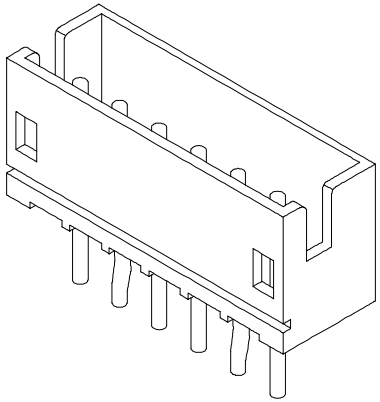

PART NO.	Dimensions	
	A	B
A-WBP-G001EG-02TB01	1.50	4.50
A-WBP-G001EG-03TB01	3.00	6.00
A-WBP-G001EG-04TB01	4.50	7.50
A-WBP-G001EG-05TB01	6.00	9.00
A-WBP-G001EG-06TB01	7.50	10.50
A-WBP-G001EG-07TB01	9.00	12.00
A-WBP-G001EG-08TB01	10.50	13.50
A-WBP-G001EG-09TB01	12.00	15.00
A-WBP-G001EG-10TB01	13.50	16.50
A-WBP-G001EG-11TB01	15.00	18.00
A-WBP-G001EG-12TB01	16.50	19.50
A-WBP-G001EG-13TB01	18.00	21.00
A-WBP-G001EG-15TB01	21.00	24.00

RoHS compliant
Unit:mm

Scale	Free
TOLERANCE	
.X	±0.25
.XX	±0.20
.XXX	±0.15
DIM	TOL
Angle	TOL

Id.	Modification	Date	Name
①	Update	23.05.2022	Segal
⓪	Drawn	25.03.2021	Luca

	Date	Name
Drawn	25.03.2021	Luca
Approved	23.05.2022	Segal

ASSMANN wsw components

Description: Wire to Board Connector
Wafer / 180° / THT / 1.50mm

ASSMANN WSW-No.
A-WBP-G001EG-xxTB01

Drawing-No.
ASS 8883 CO

rev01

Customer-No.

SHEET
3 / 6

SV5053

Downloaded from Arrow.com.

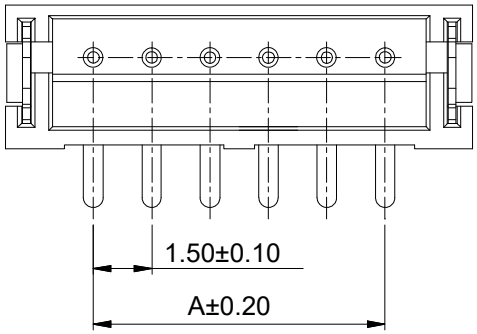

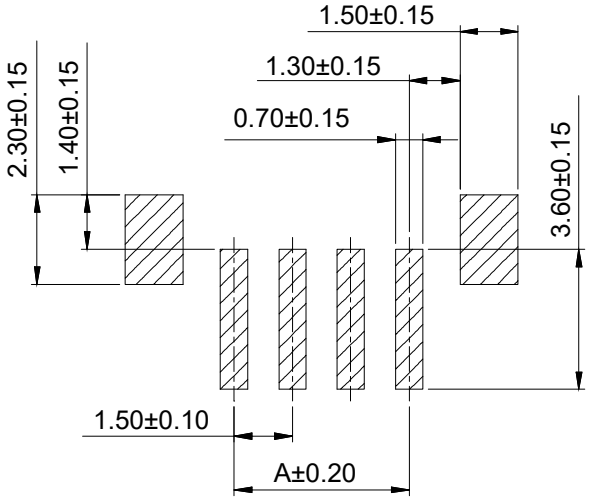

PCB LAYOUT

NOTE:

Voltage Rating:	100V AC/DC
Current Rating:	1A AC/DC
Withstanding Voltage:	500V AC/minute
Insulation Resistance:	500MΩ Min
Temperature Range:	-40℃ to +105℃
Contact Material:	Brass
Contact Plating:	Tin over Nickel
① Insulator:	Nylon 6T, UL94V-0, Beige

Packing: Tape&Reel

Mating with A-WBH-G001EG-xxCB01 Series Housing

Order Code:

A-WBP-G001EG-xxSR01

Pin Count

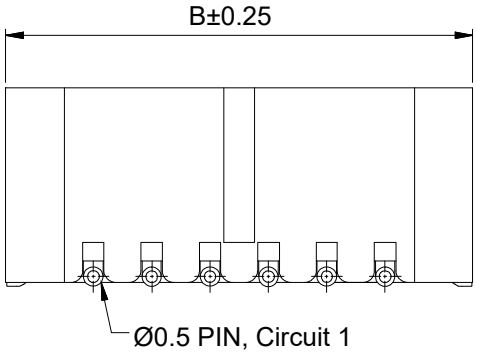

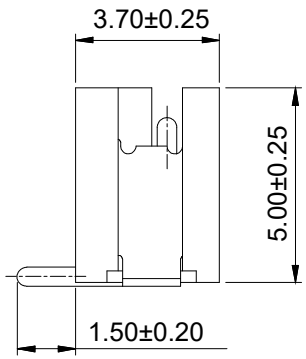

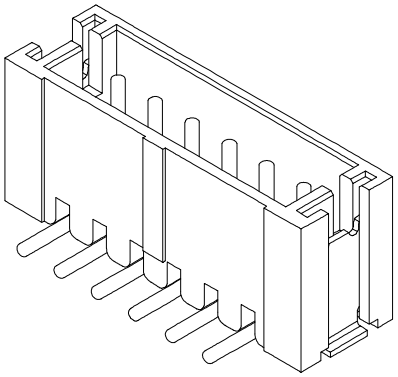

PART NO.	Dimensions	
	A	B
A-WBP-G001EG-02SR01	1.50	6.00
A-WBP-G001EG-03SR01	3.00	7.50
A-WBP-G001EG-04SR01	4.50	9.00
A-WBP-G001EG-05SR01	6.00	10.50
A-WBP-G001EG-06SR01	7.50	12.00
A-WBP-G001EG-07SR01	9.00	13.50
A-WBP-G001EG-08SR01	10.50	15.00
A-WBP-G001EG-09SR01	12.00	16.50
A-WBP-G001EG-10SR01	13.50	18.00
A-WBP-G001EG-11SR01	15.00	19.50
A-WBP-G001EG-12SR01	16.50	21.00
A-WBP-G001EG-13SR01	18.00	22.50

RoHS compliant

Unit:mm

Scale	Free
TOLERANCE	
.X	±0.25
.XX	±0.20
.XXX	±0.15
DIM	TOL
Angle	TOL

Id.	Modification	Date	Name
①	Update	23.05.2022	Segal
⓪	Drawn	25.03.2021	Luca

	Date	Name
Drawn	25.03.2021	Luca
Approved	23.05.2022	Segal

ASSMANN wsw components

Description: Wire to Board Connector Wafer / 180° / SMT / 1.50mm

ASSMANN WSW-No.

A-WBP-G001EG-xxSR01

Drawing-No. ASS 8883 CO

rev01

Customer-No.

SHEET 4 / 6

SV5053

Downloaded from Arrow.com.

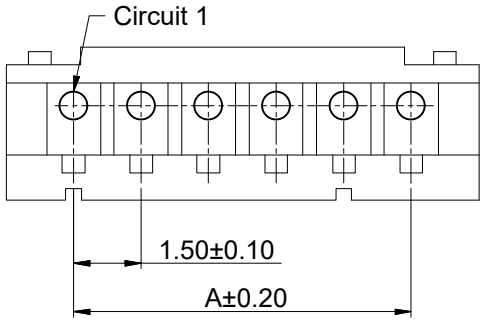

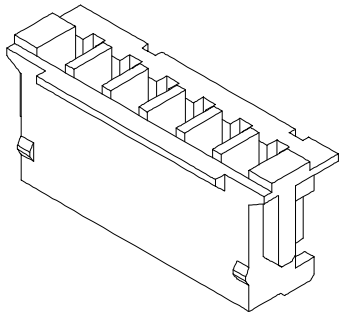

NOTE:

Voltage Rating:	100V AC/DC
Current Rating:	1A AC/DC
Withstanding Voltage:	500V AC/minute
Insulation Resistance:	500MΩ Min
Temperature Range:	-40℃ to +105℃
① Insulator:	Nylon 66, UL94V-0, Beige

Mating with A-WBP-G001Ex-xxxx01 Series Wafer and A-WBH-G001EG-01CR01 Terminal

Order Code:
A-WBH-G001EG-xxCB01
Pin Count

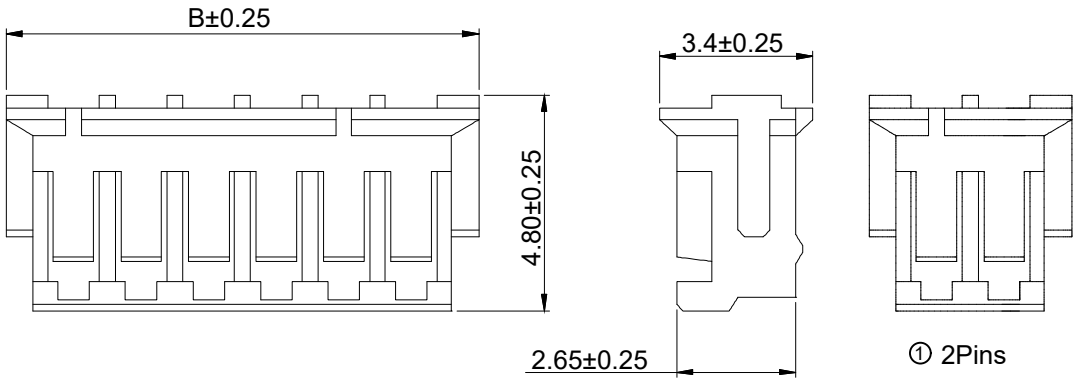

PART NO.	Dimensions	
	A	B
A-WBH-G001EG-02CB01	1.50	4.50
A-WBH-G001EG-03CB01	3.00	6.00
A-WBH-G001EG-04CB01	4.50	7.50
A-WBH-G001EG-05CB01	6.00	9.00
A-WBH-G001EG-06CB01	7.50	10.50
A-WBH-G001EG-07CB01	9.00	12.00
A-WBH-G001EG-08CB01	10.50	13.50
A-WBH-G001EG-09CB01	12.00	15.00
A-WBH-G001EG-10CB01	13.50	16.50
A-WBH-G001EG-11CB01	15.00	18.00
A-WBH-G001EG-12CB01	16.50	19.50
A-WBH-G001EG-13CB01	18.00	21.00
A-WBH-G001EG-15CB01	21.00	24.00

RoHS compliant

Unit:mm

Scale	Free
TOLERANCE	
.X	±0.25
.XX	±0.20
.XXX	±0.15
DIM	TOL
Angle	TOL

Id.	Modification	Date	Name
①	Update	23.05.2022	Segal
⓪	Drawn	25.03.2021	Luca

	Date	Name
Drawn	25.03.2021	Luca
Approved	23.05.2022	Segal

ASSMANN wsw components

Description: Wire to Board Connector Housing / 180° / 1.50mm

ASSMANN WSW-No.
A-WBH-G001EG-xxCB01

Drawing-No.
ASS 8883 CO

rev01

Customer-No.

SHEET 5 / 6

SV5053

Downloaded from Arrow.com.

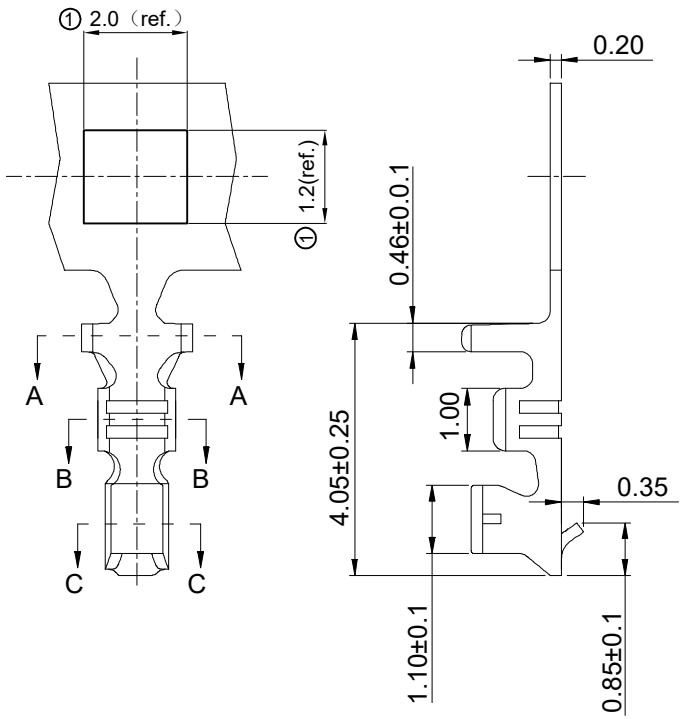

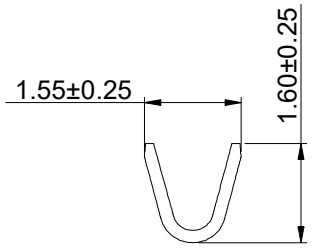

Section: A-A

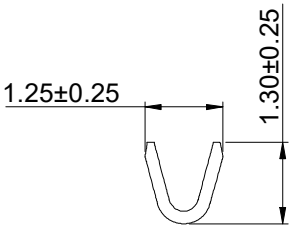

Section: B-B

NOTE:

Voltage Rating:	100V AC/DC
Current Rating:	1A AC/DC
Withstanding Voltage:	500V AC/minute
Insulation Resistance:	500MΩ Min
Temperature Range:	-40℃ to +105℃
Contact Resistance:	20mΩ Max
Material:	Phosphor Bronze
Plating:	Tin over Nickel
Applicable Wire:	26AWG to 32AWG
Packing:	10.000pcs/Reel
Used in	A-WBH-G001EG-xxCB01 Series Housing

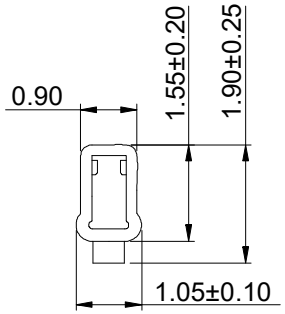

Section: C-C

RoHS compliant

Unit:mm

Scale	Free
TOLERANCE	
.X	±0.25
.XX	±0.20
.XXX	±0.15
DIM	TOL
Angle	TOL

Id.	Modification	Date	Name
①	Update	23.05.2022	Segal
⓪	Drawn	25.03.2021	Luca

	Date	Name
Drawn	25.03.2021	Luca
Approved	23.05.2022	Segal

ASSMANN WSW components

Description: Wire to Board Connector Terminal / 180° / Crimp / 1.50mm

ASSMANN WSW-No.

A-WBT-G001EG-01CR01

Drawing-No. ASS 8883 CO

rev01

Customer-No.

SHEET 6 / 6

SV5053

Downloaded from Arrow.com.