Description

- Supports DALI interface driver Programming
- Supports 0-10V Programmable Driver Programming
- Supports Other Controllers (TDD-ANPNx, SDD-AAPNx)
- Off-line programming capability
- Auto programming Mode
- Selectable tools for mass programming

Models

Name	Description	Model Number
Multi programmer	2nd Generation Multiple Programmer	PRG-MUL2

Interface Specifications

Parameters	Min.	Typ.	Max.	Note
Vaux Voltage	9.8 V	12 V	13.2 V	Auxiliary Supply Voltage
Vaux Source Current	0	-	20 mA	Auxiliary Supply Current
(Red LED,Green LED)Voltage	1.6 V	-	3 V	Voltage of External LED indicator
(Red LED,Green LED)Current	0	-	10 mA	Current of External LED indicator
(Push Button)Voltage	-	-	3.3 V	Voltage of External Push button
(Buzzer)Voltage	-	-	5 V	Voltage of External Buzzer
(Buzzer)Current	-	30 mA	-	Current of External Buzzer
5V USB current consumption	-	-	300 mA	Use USB charger or PC USB

Function Description

- **Off-line Programming**

  At PC end, the upper software can download the configuration to the programmer, then only 5V power supply is needed to program the drivers or controllers.

- **Automatic Programming**

  When this function is enabled, after connecting the programming leads to the programmer, it will download the configuration to the controller or driver.

  Long Push Button(5s<T<10s), the Automatic function will be disabled or enabled.

  When the function has been turned on, the Red LED will flicker 2 times, each time lasts 0.5 second. When the function has been turned off, the Green LED will flicker 2 times, each time lasts 0.5 second.

- **Buzzer**

  The programmer provides a port for connecting to an external Buzzer if needed.

  When programming has finished successfully, the buzzer will beep for 0.5 seconds.

Downloaded from Arrow.com.

Long Push Button(T>10s), it will enable or disable the buzzer function.

When the buzzer function is enabled by above action, the buzzer will beep 2 second, or it will beep 0.5s that means the function is disabled.

- **Product Series Matching Verify**

Before starting the programming, the programmer will read the driver model information. If the configuration model does not match the driver model, the upper software will show fail message, and the red LED will turn on.

The matching function is selectable at PC end. The default setting is "on".

Notes:

1. 0~xV controller does not support matching function for it only supports one direction protocol.
2. Green LED indicates successful programming. Red LED indicates failed programming.

LED indicator mode

	Manual Mode		Automatic Mode	
Status	Red LED	Green LED	Red LED	Green LED
Start up	flicker N times in 0.5s	flicker N times in 0.5s	flicker N times in 0.5s	flicker N times in 0.5s
Standby	off	on	off	Flicker continuously (per 1s)
Programming	off	Flicker continuously	off	Flicker continuously
Succeed	off	on	off	on
Failed	on	off	on	off

Notes: the "N" in the table indicate the programming mode, refer to the below.

N=1 Off-line programming mode for 0~xV controller.
N=2 Off-line programming mode for Timer controller.
N=3 Off-line programming mode for constant power driver.
N=4 Off-line programming mode for DALI supported driver.

Environmental Specifications

Parameters	Min	Typ	Max	Note
Operating temperature	-20 ℃	-	+50 ℃	Humidity: 10%RH to 90%RH. No condensation.
Storage temperature	-40 ℃	-	+70 ℃	Humidity: 5%RH to 90%RH. No condensation.

General Specifications

Parameter	Min.	Typ.	Max.	Notes
Dimensions Inches (L × W × H) Millimeters (L × W × H)	3.35 × 1.85 × 0.83 85 × 47 × 21			
Net Weight	-	45 g	-	

Note: All specifications are typical at 25°C unless otherwise stated.

Specifications are subject to changes without notice.

www.inventronics-co.com Tel: 86-571-56565800 Fax: 86-571-86601139 sales@inventronics-co.com

Downloaded from Arrow.com.

Packing List

Packing List	Function
PRG-MUL2	Programmer
USB Cable	Connect PC and PRG-MUL2
3-Pins Plug-in Cable	Connect PRG-MUL2 and Header, then the open leads driver could connect to the header
3-Holes Programming Header	Connect the 3-Wires Plug-in Cable and Programming leads of Driver.

Diagram

- **Connectors**

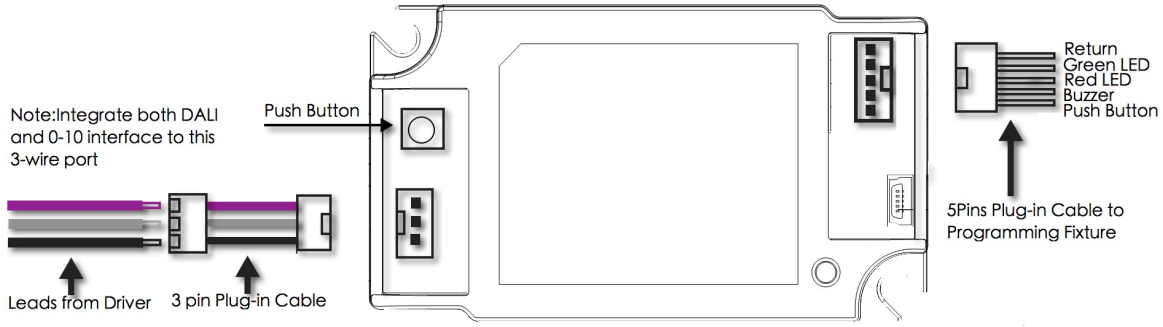

- **Open leads programmable driver connection diagram**

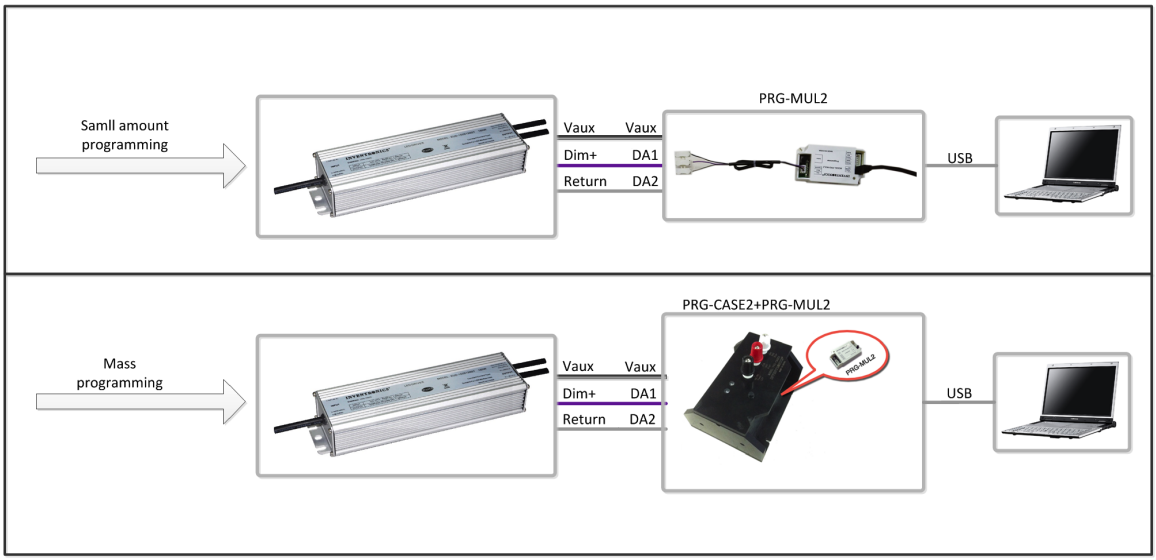

Notes:

1. All the DALI open leads driver need AC power when programming。
2. The method of installing the PRG-MUL2 to PRG-CASE2 please refer to the **PRG-CASE2** datasheet

Downloaded from Arrow.com.

- **Mass programming tool PRG-CASE2 connects with PRG-FIX-F**

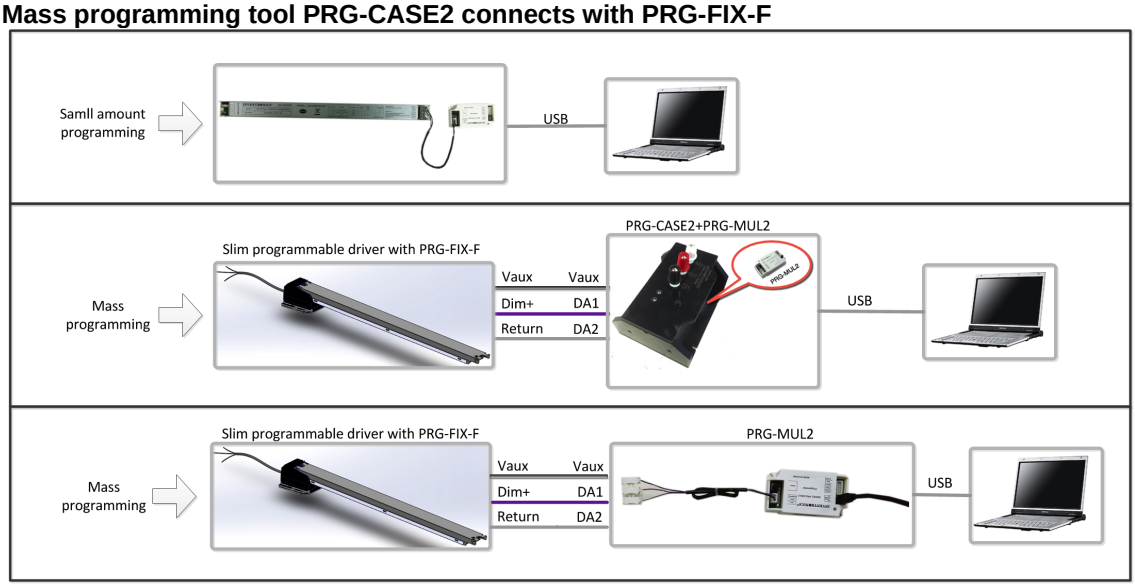

Note: Only the slim DALI driver need AC power when programming in the top diagram(Small amount programming)。

- **The connections between programmer and controllers**

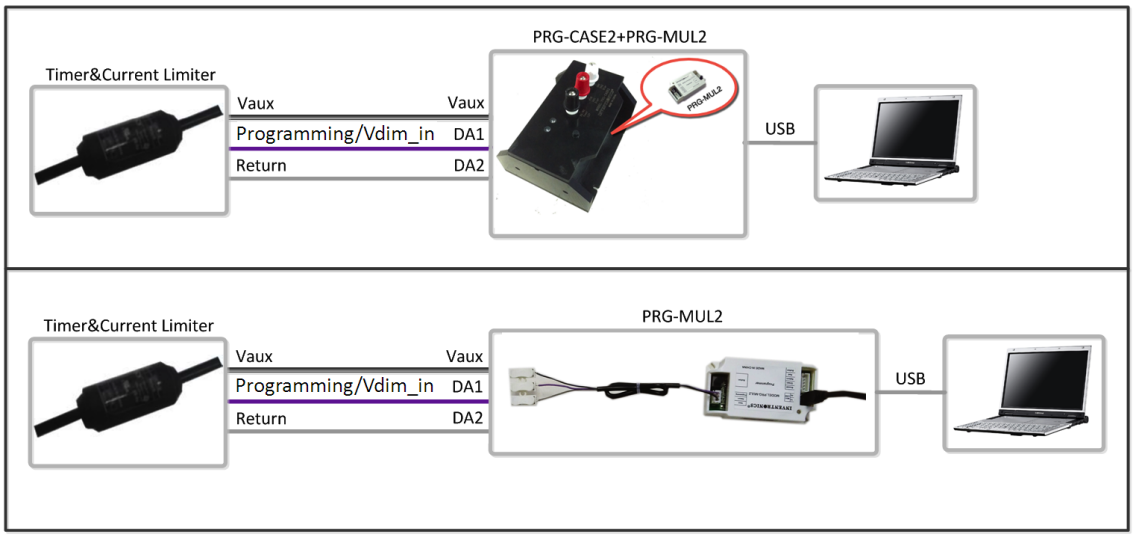

Note: PRG-MUL2 does not support “current calibration” (SDD-AAPNP supports it).

Software of programmer interface

The multi-function software and programming interface operating instructions please refer to the link below.
http://www.inventronics-co.com/resources/software/

Choose the software name as below.
This needs to be on the same page as the “choose the software name below”

Downloaded from Arrow.com.

Mechanical Outline

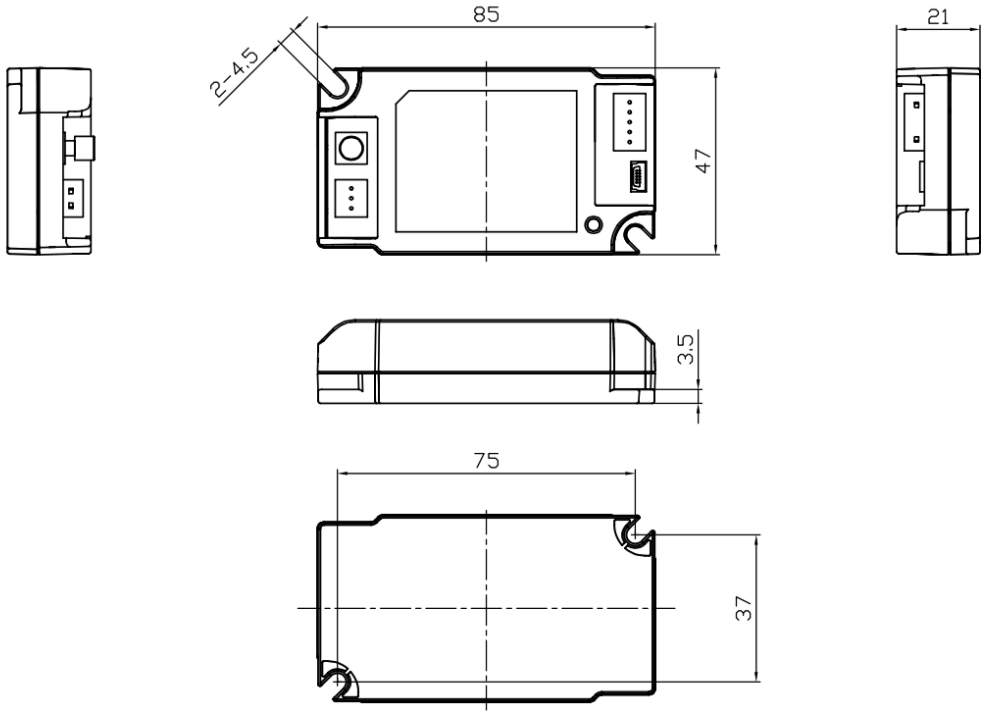

RoHS Compliance

Our products comply with the European Directive 2011/65/EU, calling for the elimination of lead and other hazardous substances from electronic products.

Downloaded from Arrow.com.

Revision History

Change Date	Rev.	Description of Change		
		Item	From	To
2015-03-31	A	Datasheets Release	/	/
2015-11-18	B	CE Certification	/	Added
2016-06-12	C	Diagram-Connectors	/	Corrected
2017-07-28	D	Diagram-The connections between programmer and controllers	/	Corrected
2018-04-12	E	Website Link in the Datasheet	/	Updated

Downloaded from Arrow.com.