We connect and protect

# Front Handle One-Piece, Width 12.2 mm, Black Anodized, 3 U, 102 mm

## CATALOG NUMBER

**10501-026**

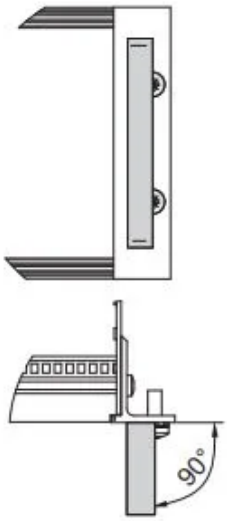


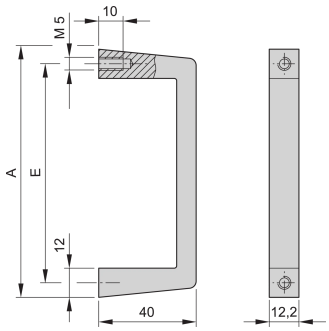


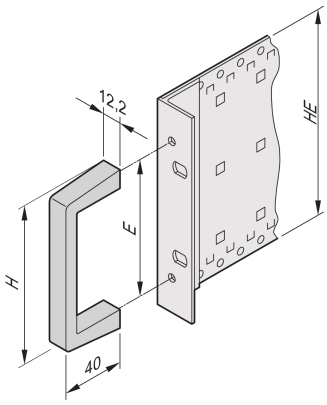


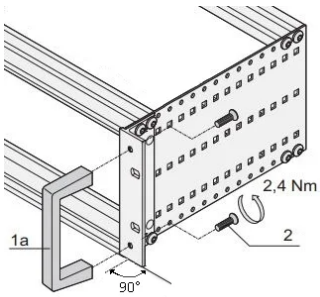


The handle can be assembled to a subrack or 19" front panel. Available with clear or black anodized surface. Handles will be bolted from the rear side.

## CERTIFICATIONS

RoHS COMPLIANT

Downloaded from Arrow.com.

## FEATURES

| |
|---|
| Static load-carrying capacity 30 kg/pair |
| Bolted from rear |

## PRODUCT ATTRIBUTES

| |
|---|
| Rack Height: 3U |
| Finish: Anodized |
| Package Quantity: 1 |
| Handle Type: Straight |
| Color: Black |
| Material: Aluminum |
| Product Family: EuropacPRO |
| Product Type: Handle |
| Works With: Subracks |
| Net Weight: 0.047kg |

## ADDITIONAL PRODUCT DETAILS

Please order assembly part kit separately.

Please take into consideration that deliveries may be carried out in the stated SPQs (SPQ, e.g. 5 pieces, 10 pieces, 50 pieces, etc.). Differing order quantities (e.g. 2 pieces) may be changed to the next possible delivery quantity = Standard Pack Quantity.

## WARNING

nVent products shall be installed and used only as indicated in nVent's product instruction sheets and training materials. Instruction sheets are available at www.nvent.com and from your nVent customer service representative. Improper installation, misuse, misapplication or other failure to completely follow nVent's instructions and warnings may cause product malfunction, property damage, serious bodily injury and death and/or void your warranty.



Downloaded from Arrow.com.

**North America**
All locations
+1.763.422.2661
Chat with us:
nvent.com/schroff

**Europe**
Straubenhardt, Germany
+49.7082.794.0
Betschdorf, France
+33.3.88.90.64.90
Warsaw, Poland
+48.22.209.98.35
Assago, Italy
+39.02.932.7141
Chat with us:
nvent.com/schroff

**Asia**
Shanghai, China
+86.21.2412.6943
Qingdao, China
+86.532.8771.6101
Singapore
+65.6768.5800
Shin-Yokohama, Japan
+81.45.476.0271
Chat with us:
nvent.com/schroff

**Middle East & India**
Dubai, United Arab Emirates
+971.4.378.1700
Bangalore, India
+91.80.6715.2001
Istanbul, Turkey
+90.216.250.7374
Chat with us:
nvent.com/schroff

Our powerful portfolio of brands:

**CADDY ERICO HOFFMAN ILSCO SCHROFF TRACHTE**

©2026 nVent. All nVent marks and logos are owned or licensed by nVent Services GmbH or its affiliates. All other trademarks are the property of their respective owners. nVent reserves the right to change specifications without notice.

This document is system-generated.



Downloaded from Arrow.com.