Data Sheet | Item Number: 750-585

2-channel analog output; 0 … 20 mA; Intrinsically safe

https://www.wago.com/750-585

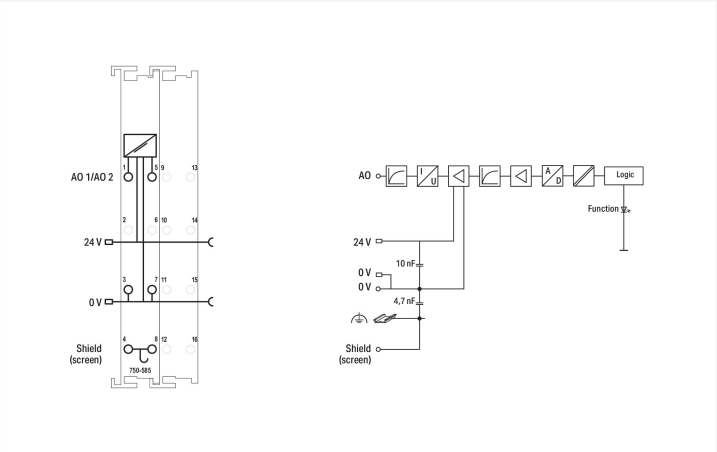

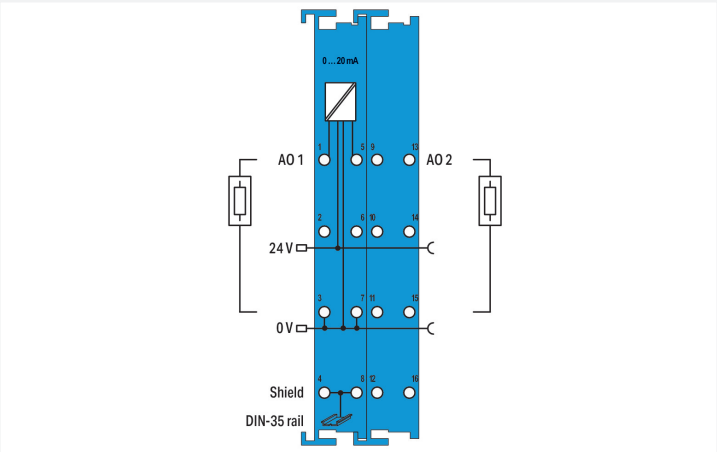

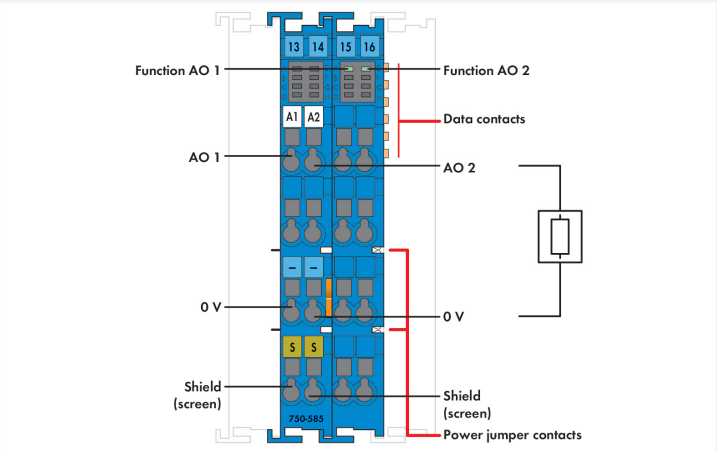

This analog output module is designed to output intrinsically safe 0 … 20 mA signals in hazardous areas classified as Zone 0 and Zone 1.
The WAGO I/O System 750/753 must be installed either in Zone 2 or in a non-hazardous area.
Power is derived from the power jumper contacts.
The outputs are short-circuit-protected.
Indicators:

- Green LED (output status)

Field and system levels are electrically isolated.

Notes

Note	The analog output module must only be operated with a 24 VDC Ex i power supply! General information on explosion protection, including installation regulations, can be found in the WAGO I/O System 750/753 manuals!

Technical data

Item description	2-Channel Analog Output; 0 … 20 mA
Number of analog outputs	2
Total number of channels (module)	2
Signal type	Current
Signal type (current)	0 … 20 mADC
Actuator connection	2 x (2-wire)
Signal characteristics	Single-ended
Resolution [bit]	12 bits
Conversion time (typ.)	2 ms
Linearity	± 2 LSB

Downloaded from Arrow.com.

Technical data

Output error, reference temperature	25 °C
Output error, deviation (max.) of the upper-range value	<±0.2 %
Temperature error (max.) of the output range value	<±0.01 %/K
Load impedance (current output)	≤ 500 Ω
Intrinsically safe Ex i	Yes
Data width	2 x 16-bit data
Supply voltage (system)	5 VDC; via data contacts
Current consumption (5 V system supply)	21 mA
Supply voltage (field)	24 VDC; (Ex i power supply: U_o = max. 26.8 V); via power jumper contacts (supply via blade contact; distribution via spring contact)
Current consumption, field supply (module with no external load)	19 mA
Power consumption $P_{max.}$	1.5 W
Power loss P_l	0.9 W
Isolation	300 VAC system/supply
Number of incoming power jumper contacts	2
Number of outgoing power jumper contacts	2
Current carrying capacity (power jumper contacts)	1 A
Indicators	LED (A, E) green: Function AO 1, AO 2

Explosion protection

Identification	**ATEX:** II 3 (1) G Ex ec [ia Ga] IIC T4 Gc; II (1) D [Ex ia Da] IIIC; I (M1) [Ex ia Ma] I **IECEx/INMETRO:** Ex ec [ia Ga] IIC T4 Gc; [Ex ia Da] IIIC; [Ex ia Ma] I **cULus (Zone classified):** Cl I Zn 2 AEx nA [ia Ga] IIC T4 Gc; Cl I Zn 2 AEx nA [ia IIIC] IIC T4 Gc; Ex nA [ia Ga] IIC T4 Gc X; Ex nA [ia IIIC] IIC T4 Gc X **cULus (Devision classified):** Class I, Div. 2, Group A B C D, T4
Ex standard	EN IEC 60079-0, -7, -11
Safety-relevant data (circuit)	U_o = 26.8 V; I_o = 56.4 mA; P_o = 378 mW; linear characteristic curve
Reactances Ex ia IIC	L_o = 11.17 mH; C_o = 92 nF
Reactances Ex ia IIB	L_o = 44.71 mH; C_o = 720 nF
Reactances Ex ia IIA	L_o = 89.42 mH; C_o = 2.37 µF
Reactances Ex ia I	L_o = 146.7 mH; C_o = 4.2 µF
Reactances (note)	Reactances without accounting for the concurrence of capacitance (C_o) and inductance (L_o)

Connection data

Connection technology: I/O	6 x CAGE CLAMP®
Connectable conductor materials	Copper
Connection type	Inputs/outputs
Solid conductor	0.08 … 2.5 mm² / 28 … 14 AWG
Fine-stranded conductor	0.08 … 2.5 mm² / 28 … 14 AWG
Strip length	8 … 9 mm / 0.31 … 0.35 inches

Physical data

Width	24 mm / 0.945 inches
Height	100 mm / 3.937 inches
Depth	67.8 mm / 2.669 inches
Depth from upper-edge of DIN-rail	60.6 mm / 2.386 inches

Downloaded from Arrow.com.

Mechanical data

Mounting type	DIN-35 rail

Material data

Housing material	Polycarbonate; polyamide 6.6
Fire load	2.249 MJ
Weight	90.1 g
Conformity marking	CE

Environmental requirements

Ambient temperature (operation)	0 … +55 °C
Ambient temperature (storage)	-25 … +85 °C
Protection type	IP20
Pollution degree	2 per IEC 61131-2
Operating altitude	0 … 2000 m / 0 … 6562 ft
Mounting position	Horizontal left, horizontal right, horizontal top, horizontal bottom, vertical top and vertical bottom
Relative humidity (without condensation)	95 %
Vibration resistance	4g per IEC 60068-2-6
Shock resistance	15g per IEC 60068-2-27
EMC immunity to interference	per EN 61000-6-2, marine applications
EMC emission of interference	per EN 61000-6-3, marine applications
Exposure to pollutants	per IEC 60068-2-42 and IEC 60068-2-43
Permissible H_2S contaminant concentration at a relative humidity 75 %	10 ppm
Permissible SO_2 contaminant concentration at a relative humidity 75 %	25 ppm

Commercial data

Product Group	15 (I/O System)
PU (SPU)	1 pcs
Packaging type	Box
Country of origin	DE
GTIN	4045454725570
Customs tariff number	85389099990

Product Classification

UNSPSC	32151705
eCl@ss 10.0	27-24-26-01
eCl@ss 9.0	27-24-26-01
ETIM 9.0	EC001596
ETIM 8.0	EC001596
ECCN	NO US CLASSIFICATION

Downloaded from Arrow.com.

Environmental Product Compliance

CAS-No.	1303-86-2 1317-36-8 7439-92-1
REACH Candidate List Substance	Diboron trioxide Lead Lead monoxide
RoHS Compliance Status	Compliant,With Exemption
RoHS Exemption	6(c) 7(a) 7(c)-I 7(c)-II
SCIP notification number (Bulgaria)	5559734f-5021-4918-9ed7-c188ff7f0b36
SCIP notification number (Czech Republic)	283bd2f1-26d5-40d0-b691-80cafe052c3a

Approvals / Certificates

General approvals

Approval	Standard	Certificate Name
EAC GZO Almaty Standart	TP TC 020/2011	EAC CoC 03083
KC National Radio Research Agency	Article 58-2, Clause 3	MSIP-REM-W43-AOM750
UL Underwriters Laboratories Inc. (ORDINARY LOCATIONS)	UL 508	E175199

Declarations of conformity and manufacturer's declarations

Approval	Standard	Certificate Name
EU-Ex-Declaration of Conformity WAGO GmbH & Co. KG	-	-
UK-Ex-Declaration of Conformity WAGO GmbH & Co. KG	-	-

Approvals for marine applications

Approval	Standard	Certificate Name
ABS American Bureau of Shipping	-	22-2219060
BV Bureau Veritas S.A.	-	13453/E0 BV
DNV DNV GL SE	DNV-CG-0339,Aug.2021	TAA0000194
KR Korean Register of Shipping	-	KR HMB05880-AC001
LR Lloyds Register EMEA	-	LR22180952TA
PRS Polski Rejestr Statków	-	TE/1101/880590/23
RINA RINA Germany GmbH	-	ELE343521XG001

Approvals for hazardous areas

Approval	Standard	Certificate Name
AEx UL International Germany GmbH	UL 60079	E480271
ATEX TUEV Nord Cert GmbH	EN 60079-0	TUEV12ATEX106032X (Ex ec[iaGa] IIC T4 Gc, [Ex iaDa] IIIC, [Ex iaMa] I)
CCC CNEX	CNCA-C23-01	2020312310000211 (Ex ec[iaGa] IIC T4 Gc, [Ex iaDa] IIIC, [Ex iaMa] I)
IECEx TUEV Nord Cert GmbH	IEC 60079	IECEx TUN12.0039X (Ex ec[iaGa] IIC T4 Gc, [Ex iaDa] IIIC, [Ex iaMa] I)
INMETRO TÜV Rheinland do Brasil Ltda.	-	TÜV_14.1911_X
UKEx Element Materials Technology UK	-	EMA21UKEX0069X
UL Underwriters Laboratories Inc. (HAZARDOUS LOCATIONS)	UL 121201	E198726

Downloaded from Arrow.com.

Downloads

Environmental Product Compliance

Compliance Search
Environmental Product Compliance 750-585

Documentation

Manual

Product Manual 2-channel, 0-20mA, Ex i	2477427851 | 1 | en-US | 2024-12-09 14:20 17.12.2024	pdf 3452.11 KB	

System Description

750/753 Series I/O-System – General Product Information	pdf 953.35 KB	
Overview on WAGO-I/O-SYSTEM 750 approvals	pdf 770.48 KB	
Ex i Overview	pdf 442.07 KB	

Bid Text

750-585	19.02.2019	xml 5.81 KB	
750-585	06.10.2017	doc 29.00 KB	

Instruction Leaflet

CCC Ex (Additional information)	26.04.2023	pdf 143.96 KB	

CAD/CAE-Data

CAD data

2D/3D Models 750-585

CAE data

EPLAN Data Portal 750-585
WSCAD Universe 750-585
ZUKEN Portal 750-585

Device Files

Device Driver

WAGO USB Service Kabel Treiber / Serie 750 und 857	6.5.3.0 10.09.2014	zip 4721.96 KB	

Downloaded from Arrow.com.

1 Compatible Products

1.1 Optional Accessories

1.1.1 DIN-rail

1.1.1.1 Mounting accessories

Item No.: 210-196
Aluminum carrier rail; 35 x 8.2 mm; 1.6 mm thick; 2 m long; unslotted; similar to EN 60715; silver-colored

Item No.: 210-198
Copper carrier rail; 35 x 15 mm; 2.3 mm thick; 2 m long; unslotted; according to EN 60715; copper-colored

Item No.: 210-508
Steel carrier rail; 35 x 15 mm; 1.5 mm thick; 2 m long; slotted; galvanized; similar to EN 60715; silver-colored

Item No.: 210-197
Steel carrier rail; 35 x 15 mm; 1.5 mm thick; 2 m long; slotted; similar to EN 60715; silver-colored

Item No.: 210-506
Steel carrier rail; 35 x 15 mm; 1.5 mm thick; 2 m long; unslotted; galvanized; similar to EN 60715; silver-colored

Item No.: 210-114
Steel carrier rail; 35 x 15 mm; 1.5 mm thick; 2 m long; unslotted; similar to EN 60715; silver-colored

Item No.: 210-118
Steel carrier rail; 35 x 15 mm; 2.3 mm thick; 2 m long; unslotted; according to EN 60715; silver-colored

Item No.: 210-115
Steel carrier rail; 35 x 7.5 mm; 1 mm thick; 2 m long; slotted; according to EN 60715; "Hole width 18 mm; silver-colored

Item No.: 210-112
Steel carrier rail; 35 x 7.5 mm; 1 mm thick; 2 m long; slotted; according to EN 60715; "Hole width 25 mm; silver-colored

Item No.: 210-504
Steel carrier rail; 35 x 7.5 mm; 1 mm thick; 2 m long; slotted; galvanized; according to EN 60715; silver-colored

Item No.: 210-113
Steel carrier rail; 35 x 7.5 mm; 1 mm thick; 2 m long; unslotted; according to EN 60715; silver-colored

Item No.: 210-505
Steel carrier rail; 35 x 7.5 mm; 1 mm thick; 2 m long; unslotted; galvanized; according to EN 60715; silver-colored

1.1.2 Marking

1.1.2.1 Group marker carrier

Item No.: 750-107
Group marker carrier

1.1.2.2 Marker

Item No.: 2009-145/000-006
Mini-WSB Inline; for Smart Printer; 1700 pieces on roll; stretchable 5 - 5.2 mm; plain; snap-on type; blue

Item No.: 2009-145/000-007
Mini-WSB Inline; for Smart Printer; 1700 pieces on roll; stretchable 5 - 5.2 mm; plain; snap-on type; gray

Item No.: 2009-145/000-023
Mini-WSB Inline; for Smart Printer; 1700 pieces on roll; stretchable 5 - 5.2 mm; plain; snap-on type; green

Item No.: 2009-145/000-012
Mini-WSB Inline; for Smart Printer; 1700 pieces on roll; stretchable 5 - 5.2 mm; plain; snap-on type; orange

Item No.: 2009-145/000-005
Mini-WSB Inline; for Smart Printer; 1700 pieces on roll; stretchable 5 - 5.2 mm; plain; snap-on type; red

Item No.: 2009-145/000-024
Mini-WSB Inline; for Smart Printer; 1700 pieces on roll; stretchable 5 - 5.2 mm; plain; snap-on type; violet

Item No.: 2009-145
Mini-WSB Inline; for Smart Printer; 1700 pieces on roll; stretchable 5 - 5.2 mm; plain; snap-on type; white

Item No.: 2009-145/000-002
Mini-WSB Inline; for Smart Printer; 1700 pieces on roll; stretchable 5 - 5.2 mm; plain; snap-on type; yellow

Item No.: 248-501/000-006
Mini-WSB marking card; as card; not stretchable; plain; snap-on type; blue

Item No.: 248-501/000-007
Mini-WSB marking card; as card; not stretchable; plain; snap-on type; gray

Item No.: 248-501/000-023
Mini-WSB marking card; as card; not stretchable; plain; snap-on type; green

Item No.: 248-501/000-017
Mini-WSB marking card; as card; not stretchable; plain; snap-on type; light green

Item No.: 248-501/000-012
Mini-WSB marking card; as card; not stretchable; plain; snap-on type; orange

Item No.: 248-501/000-005
Mini-WSB marking card; as card; not stretchable; plain; snap-on type; red

Item No.: 248-501/000-024
Mini-WSB marking card; as card; not stretchable; plain; snap-on type; violet

Item No.: 248-501
Mini-WSB marking card; as card; not stretchable; plain; snap-on type; white

Item No.: 248-501/000-002
Mini-WSB marking card; as card; not stretchable; plain; snap-on type; yellow

 Continued on next page

Downloaded from Arrow.com.

1.1.2.3 Marker carrier

Item No.: 750-103
Group marker carrier

1.1.3 Shield termination

1.1.3.1 Shield clamping saddles

Item No.: 790-108
Shield clamping saddle; 11 mm wide; diameter of compatible conductor; 3 … 8 mm

Item No.: 790-208
Shield clamping saddle; 12.4 mm wide; 3 … 8 mm

Item No.: 790-116
Shield clamping saddle; 19 mm wide; diameter of compatible conductor; 7 … 16 mm

Item No.: 790-216
Shield clamping saddle; 21.8 mm wide; 6 … 16 mm

Item No.: 790-124
Shield clamping saddle; 27 mm wide; diameter of compatible conductor; 6 … 24 mm

Item No.: 790-220
Shield clamping saddle; 30 mm wide; 6 … 20 mm

Item No.: 790-140
Shield clamping saddle; diameter of compatible conductor

1.1.4 Supply module

1.1.4.1 Supply module

Item No.: 750-606
Power Supply; 24 VDC; Diagnostics; Intrinsically safe

Item No.: 750-625/000-001
Power Supply; 24 VDC; Intrinsically safe

Downloaded from Arrow.com.