MICRO SWITCH
FREEPORT ILLINOIS
A DIVISION OF HONEYWELL
FED. MFG. CODE 91929

SWITCH - BASIC

CATALOG LISTING
BA-2R-P4

ABF7000

JG03288

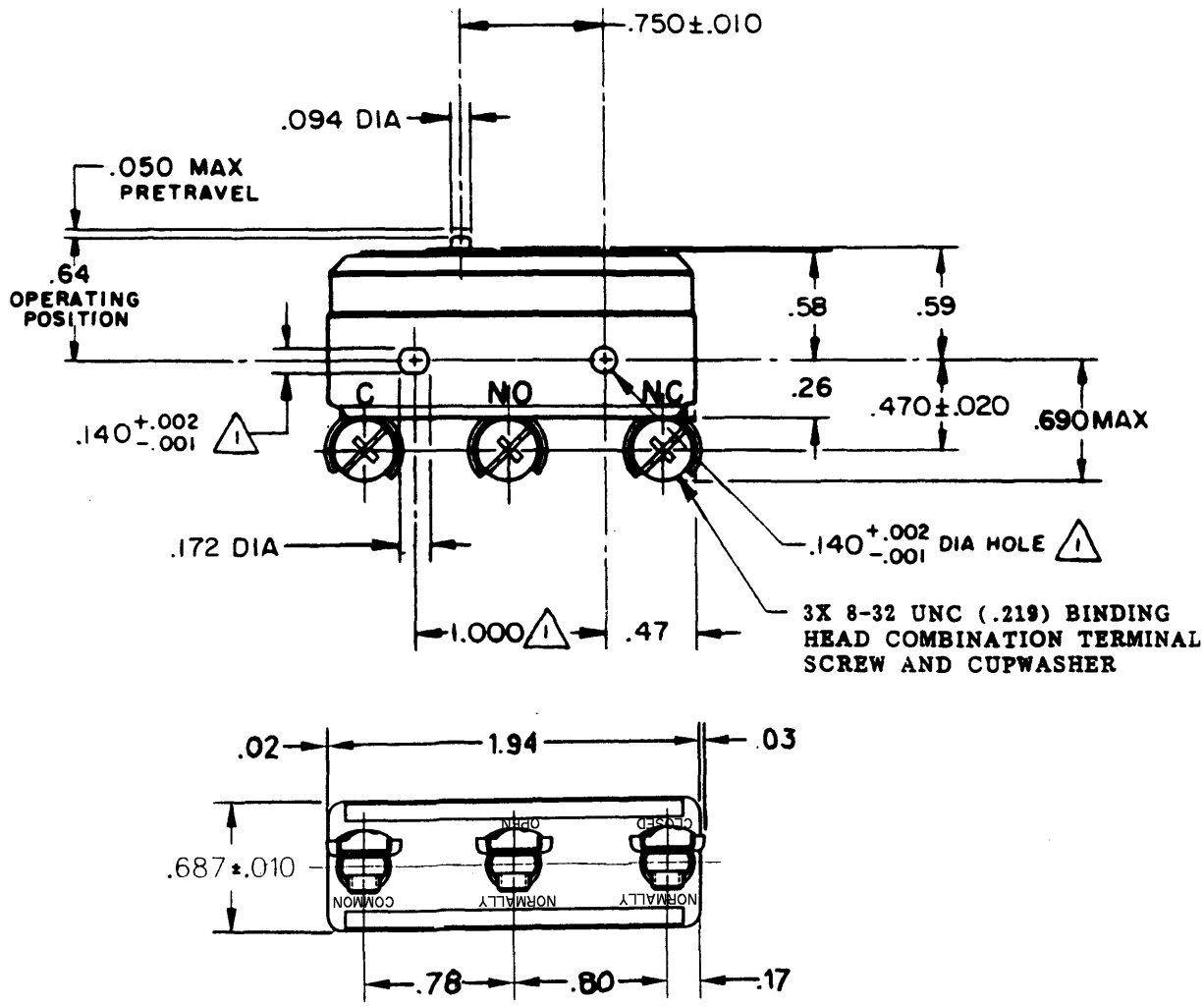

NOTE
1. MOUNTING HOLES WILL ACCEPT PINS OR SCREWS OF .139 MAX DIA ON 1.000±.002 CENTERS

THIS DRAWING COVERS A PROPRIETARY ITEM AND IS THE PROPERTY OF MICRO SWITCH, A DIVISION OF MINNEAPOLIS-HONEYWELL REGULATOR CO. THIS DRAWING IS NOT TO BE COPIED OR USED WITHOUT THE APPROVAL OF MICRO SWITCH.

CHARACTERISTICS

OPERATING FORCE ---------- 14 - 22 OZ

RELEASE FORCE ---------- 10 OZ MIN

DIFFERENTIAL TRAVEL ---- .0020-.0075

OVERTRAVEL ---------- .010 MIN

ELECTRICAL DATA

CONTACT ARRANGEMENT
S P D T

-L23-
20A-125, 250, OR 480 VAC
10A-125 VAC "L"
1 HP-125 VAC; 2 HP-250 VAC
1/2 A-125 VDC; 1/4 A-250 VDC

-L288-
-L308-
-L315-
20(3)A 250V ~ T85 5E4

SCALE FULL

DO NOT SCALE PRINT

UNLESS OTHERWISE SPECIFIED
DIMENSIONS ARE IN INCHES
TOLERANCES ARE:

ONE PLACE	(.0)	±.030
TWO PLACE	(.00)	±.015
THREE PLACE	(.000)	±.005
ANGLES		±1°

WEIGHT .074 LB

BA-2R-P4
PAGE 1 OF 1

M

DRAWING NUMBER

ISSUE 8

RELEASE NO.

REPLACES

CHECK

REVISIONS

A	C016851	G C H 16 FEB 63	
B	CO-73267-G	J A L 29 OCT 93	20FEB06
C	CO-75367B	K D R 3 MAR 94	RJ
D	CO-77863	G J W 29 APR 96	CHECK
E	C093346	D L T 21 AUG 98	
F	0018656	NM 20FEB06	

4 APR '63

DRAWN

CHECK

DRAWN G C H 16 FEB 63

FORMTEK
FO-50378

Downloaded from Arrow.com.