HC-STA-B10-BWD-ELC-AL - Housing

1411322

https://www.phoenixcontact.com/us/products/1411322

Please be informed that the data shown in this PDF document is generated from our online catalog. Please find the complete data in the user documentation. Our general terms of use for downloads are valid.



HEAVYCON B10 panel mounting base, with double locking latch, with flat gasket, salt-water-resistant aluminum, conductive profile gasket

Your advantages

- Good shielding in the event of electromagnetic interference

Commercial data

Item number	1411322
Packing unit	1 pc
Minimum order quantity	1 pc
Sales key	BF56
Product key	AF7APB
GTIN	4046356927239
Weight per piece (including packing)	102.7 g
Weight per piece (excluding packing)	103.2 g
Customs tariff number	85389099
Country of origin	CN

Downloaded from Arrow.com.

Technical data

Notes

General	For contact inserts HC-B10, BB18, DD42, M, K8/24
General	also available as a powder-coated or color version: 1373286 HC-STA-B10-BWD-EL/.../...

Product properties

Product type	Housing with locking latch
Housing type	Panel mounting base
Application	Standard
Type	B10
Pg screw connection	none

Dimensions

Dimensional drawing	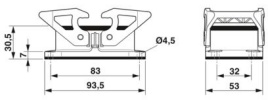
Width	53 mm
Height	30.5 mm
Length	93.5 mm
Drill hole distance, horizontal	83 mm
Drill hole distance, vertical	32 mm
Hole diameter	4.5 mm

Installation dimensions

Width of the assembly cutout	35 mm
Length of the assembly cutout	65 mm

Material specifications

Flammability rating according to UL 94	V0 (Interlock)
Seal material	NBR, conductive
	NBR, conductive
Housing material	Die-cast aluminum, salt water resistant
Housing surface material	uncoated
Locking latch material	PA

Mechanical properties

Mechanical data

Locking type	Latch

Connection data

Tightening torque	0.8 Nm ... 1.2 Nm (For M4 mounting screws on the panel-mount

Downloaded from Arrow.com.

	base)

Environmental and real-life conditions

Ambient conditions

Degree of protection	IP66
	IP67
Enclosure rating (NEMA)	4 (UL 50e)
	4X (UL 50e)
	12 (UL 50e)
Impact strength	IK09
Ambient temperature (operation)	-40 °C ... 125 °C

Downloaded from Arrow.com.

Drawings

Dimensional drawing

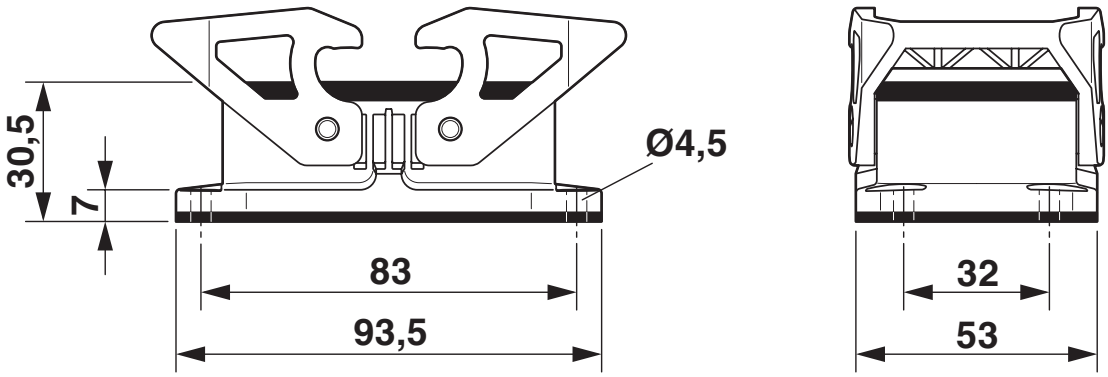

Dimensional drawing

Dimensional drawing

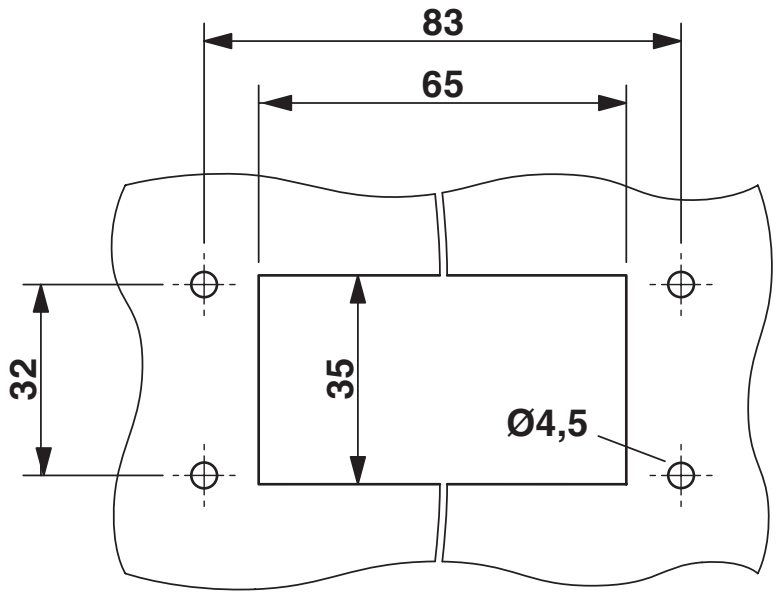

Mounting cutout

Downloaded from Arrow.com.

Approvals

To download certificates, visit the product detail page: https://www.phoenixcontact.com/us/products/1411322

DNV
Approval ID: TAE000037S

cUL Recognized
Approval ID: E255026

UL Recognized
Approval ID: E255026

Downloaded from Arrow.com.

Classifications

ECLASS

ECLASS-13.0	27440202
ECLASS-15.0	27440202

ETIM

ETIM 9.0	EC000437

UNSPSC

UNSPSC 21.0	31261500

Downloaded from Arrow.com.

Environmental product compliance

EU RoHS

Fulfills EU RoHS substance requirements	Yes, No exemptions

China RoHS

Environment friendly use period (EFUP)	EFUP-E
	No hazardous substances above the limits

EU REACH SVHC

REACH candidate substance (CAS No.)	No substance above 0.1 wt%

Phoenix Contact 2025 © - all rights reserved
https://www.phoenixcontact.com

Phoenix Contact USA
586 Fulling Mill Road
Middletown, PA 17057, United States
(+717) 944-1300
info@phoenixcon.com

Downloaded from Arrow.com.